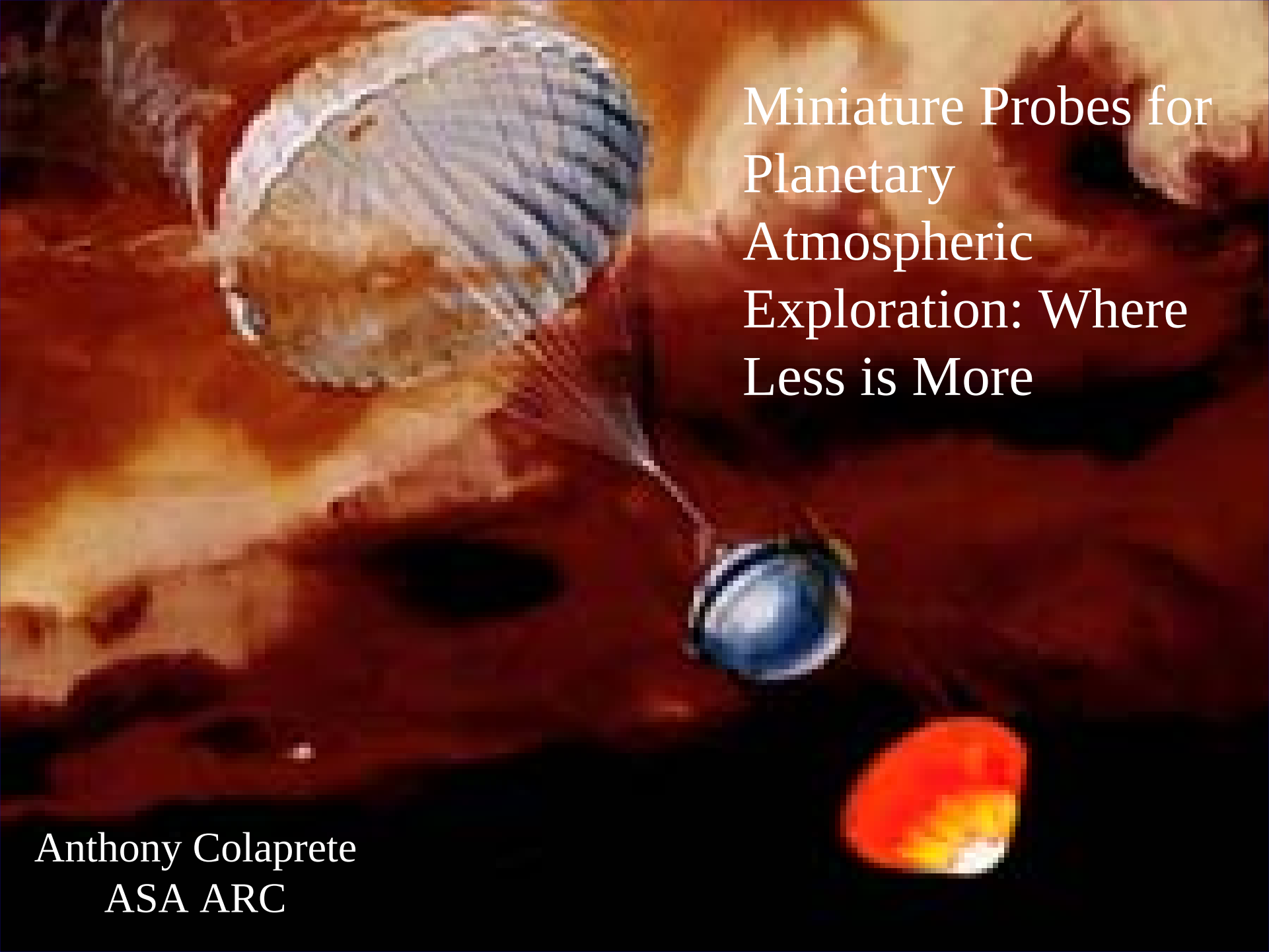

Miniature Probes for Planetary Atmospheric Exploration: Where Less is More

Anthony Colaprete
ASA ARC

Outline

- Past (and Current) Probes and their Limitations
- Key Science Drives…

  … and Engineering Limitations
- An Alternate Architecture and a Mission Concept

Past (and Current) Paradigm

Science Probes Since the 1960's:

- PAET (Earth)
- Pioneer Venus, Vega, Venera (Venus)
- Viking, Pathfinder, DS-2, MER, Phoenix (Mars)
- Galileo (Jupiter)
- Huygens (Titan)

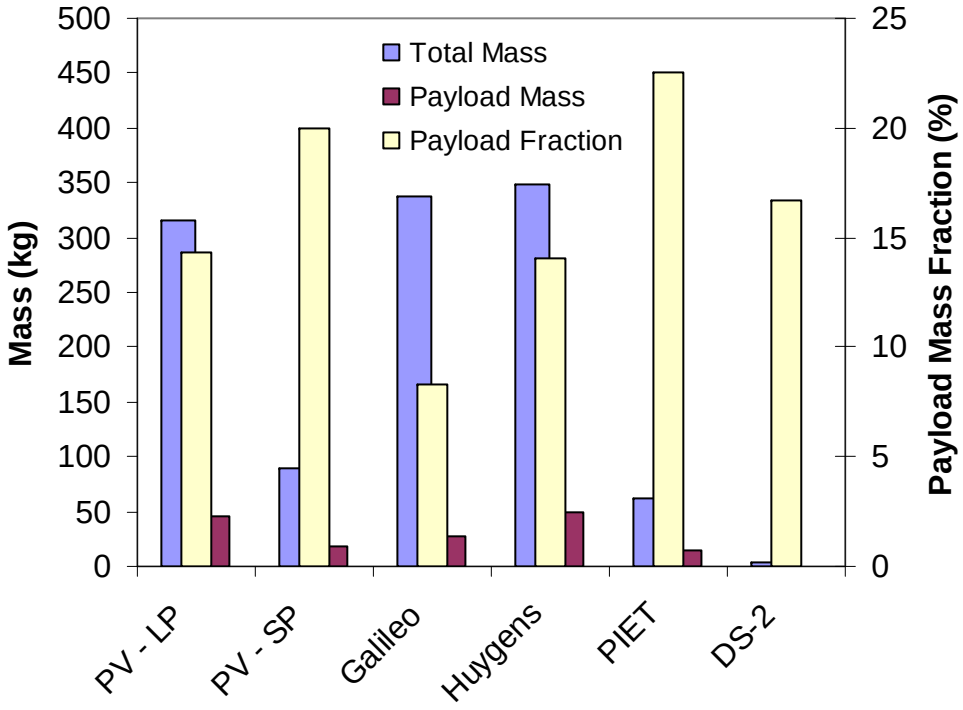

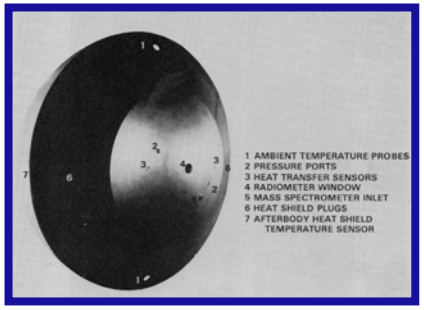

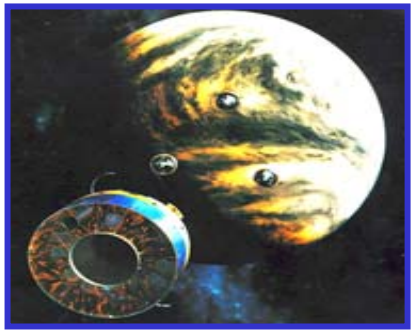

In-Situ Mars Atmosphere Profiling

Viking 1 & 2:

- Atmospheric state variables during entry (direct).
- 5 minutes each

Pathfinder and MER:

- Atmospheric state variables during entry (derived).
- 5 minutes each

Phoenix:

- Atmospheric state variables during entry (derived).
- 5 minutes

In All, about 25 minutes has been spent making measurements between the surface and 80 km.

And now for the rest of the data…

Venus Profile

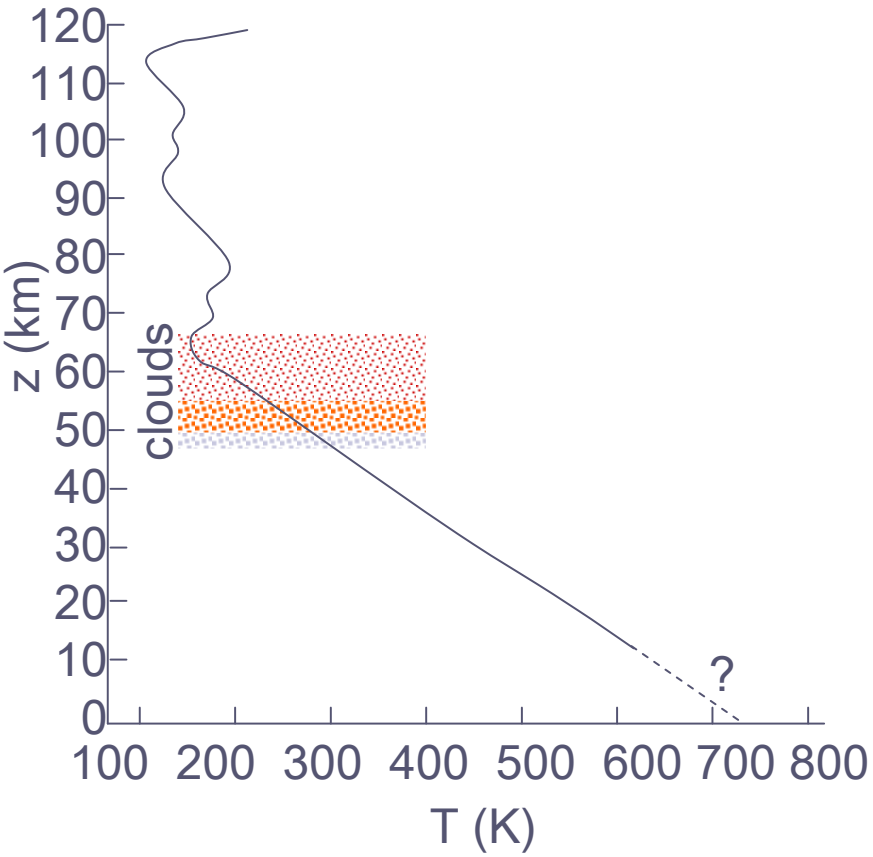

Titan Profile

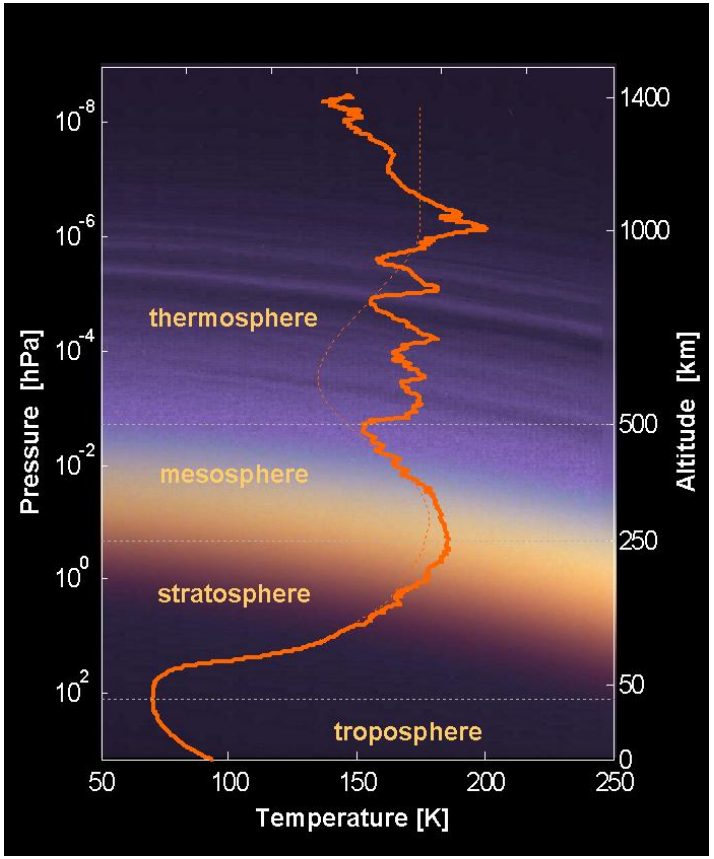

In all, planetary entry probes have measured ~14 individual atmospheric profiles.

Science Rational for Multiple Micro-Probes

Can make in-situ measurements

- Ground truthing for remote sensing
- Making unique in-situ measurements difficult to obtain remotely

Multiple probes give you statistics

- Both in time and space
- Avoid uncertainty associated with small sample sets

Can provide network benefits, including synoptic measurements

Can go places large probes may not be able to due to size or risk limitations

Possible Applications for Multiple Probes

Multiple atmospheric sounders

- Simultaneous entries at different local times to give snap shot of dynamics
- Period entries over time in coordination with remote sensing
- Multiple entries with unique payloads

Landed Network

- Synoptic weather (>10 landers)
- Seismic networks (>3 landers)
- Penetrators (e.g., DS-2)
- Impactors

Crewed Descent

- Forward observers to high-value descent vehicles

The Limitations of Entry Probes

- Up to this point it is very costly in terms of mass, and always mass = $$

- Can only afford to fly a few (if your lucky) and usually only one - Statistics of small numbers (e.g., Galileo)

- Limited lifetime – poor temporal coverage

The challenge is to change the way probes are done to overcome these limitations!

Atmospheric Entry Mission & Probe Design

Mission Design Considerations:

- Intended Science – Where are you headed?
- Key Factors: **Mass**, Volume, Power, Design Complexities (risk) and Cost

Consider Mass:

Probe Breakdown

- Payload: 10-20%
- TPS: 5%-50% (very sensitive to entry conditions)
- Structures: 5-12%
- Parachute: 2-50% (increases with decreasing probe size)
- Thermal/Avionics/Com: 10-20%

In most cases (maybe all but one) the probe mass was a significant part of the total SC bus mass (~20-40%).

The First Mirco-Probe?

DS-2: Almost a Proof of Concept

- Mass ~3.5 kg
- Payload (penetrator) ~0.6 kg
- No parachute
- More than one
- Relative Cheap ~$30M

Another Key Feature:

- Focused Science (limited payload)

The payload mass fraction was not substantially different than other probes (~17%).

Science on micro-probes must be very focused!

Atmospheric Profilers

SOREX VI Atmospheric Calibration Sphere:

- IMU gives density (T and P)
- Total mass < 1 kg
- No parachute

NASA V-Team Descent Probe

- 4 accelerometers
- 3-axis gyro
- 2 external temperature
- 2 external pressure
- GPS
- Total mass ~3kg
- Parachute = 50% of mass

Future Micro Probe System Considerations

Science instrument design

- Multiple integrated sensors

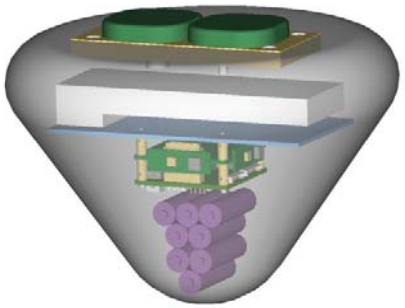

TPS

- New materials for outer planets

Terminal descent & landing

- Parachute? Rotors?
- Heat shield separation
- Novel Shapes

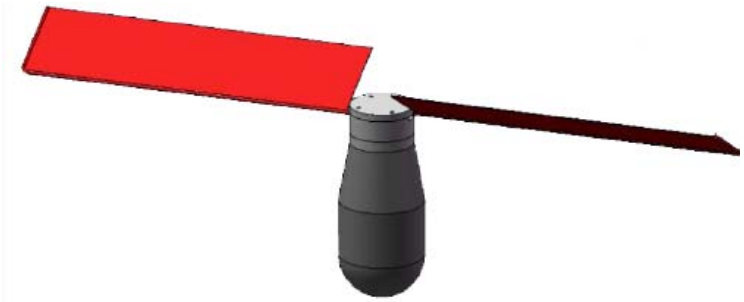

Thermal and power management

- Extreme operational ranges

Data storage, processing, relay & comm.

- Miniature, ruggedized and low power transmitters and avionics

An Example Climate Network Mission

Pascal Science Objectives

(1) Joint characterization of the near-surface general circulation and its interaction with the surface.

- **Measure the surface signature of the general circulation**
- **Monitor aeolian processes & water exchange**

(2) Determine how the general circulation controls the dust, water, and CO_2 cycles

(3) Provide a basis for comparative planetary meteorology

(4) Provide a weather monitoring infrastructure for future missions and synergy for all observations

==> Characterize the Present Global Climate System <==

Pascal – A Mars Network Mission

Pressure and Opacity Are the Most Important Measurements

- Pressure gives column mass
  - *Pressure gradients related to winds*
- Opacity gives the forcing
  - *Measures extinction of solar radiation*
- The combination also gives
  - CO_2 cycle
  - Dust cycle

Only two measurements are needed!

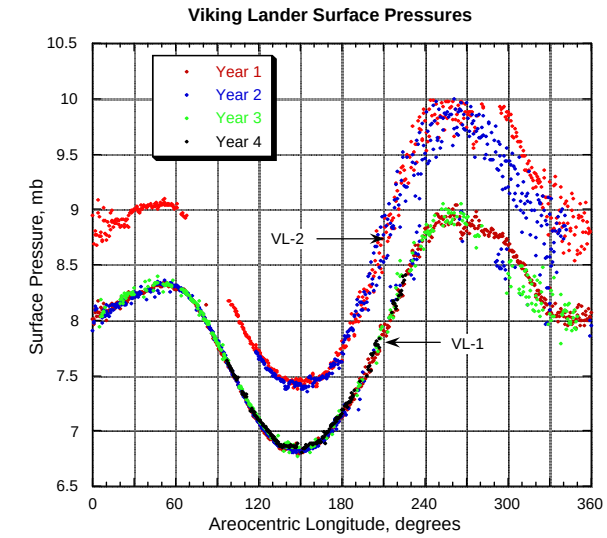

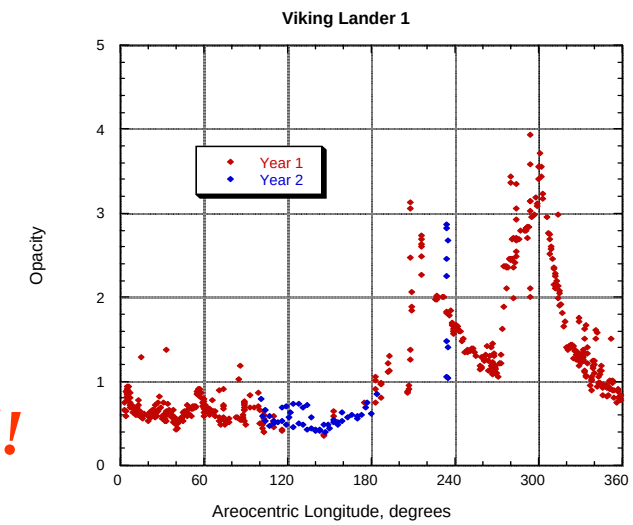

Pascal – A Mars Network Mission

How Many Stations are Needed?

General Circulation

- Need broad latitudinal coverage
  - sample each meteorological regime
    - 1 in tropics
    - 1 in mid-latitudes of each hemisphere
    - 1 in polar regions of each hemisphere
- Need to resolve longitudinal structure
  - wave 2 is dominant feature
  - need *at least* 4 stations ~ 90° apart
- Don't need many polar stations

No. Stations

5

5x4 = 20

20-4 = **16**

CO_2 Cycle

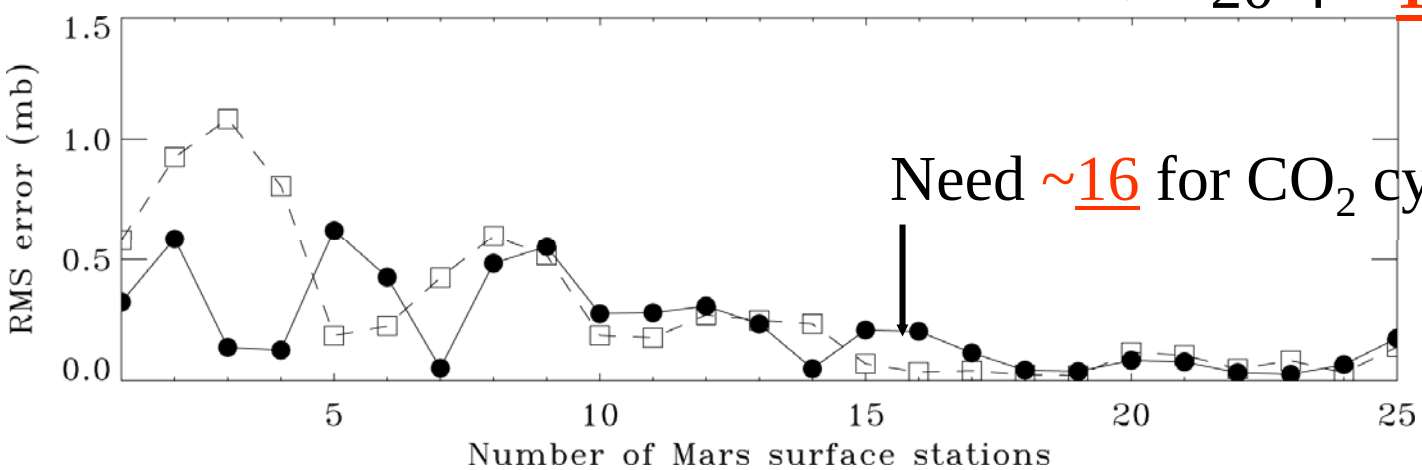

Need ~16 for CO_2 cycle

Pascal – A Mars Network Mission

Pascal Sample Network Configuration

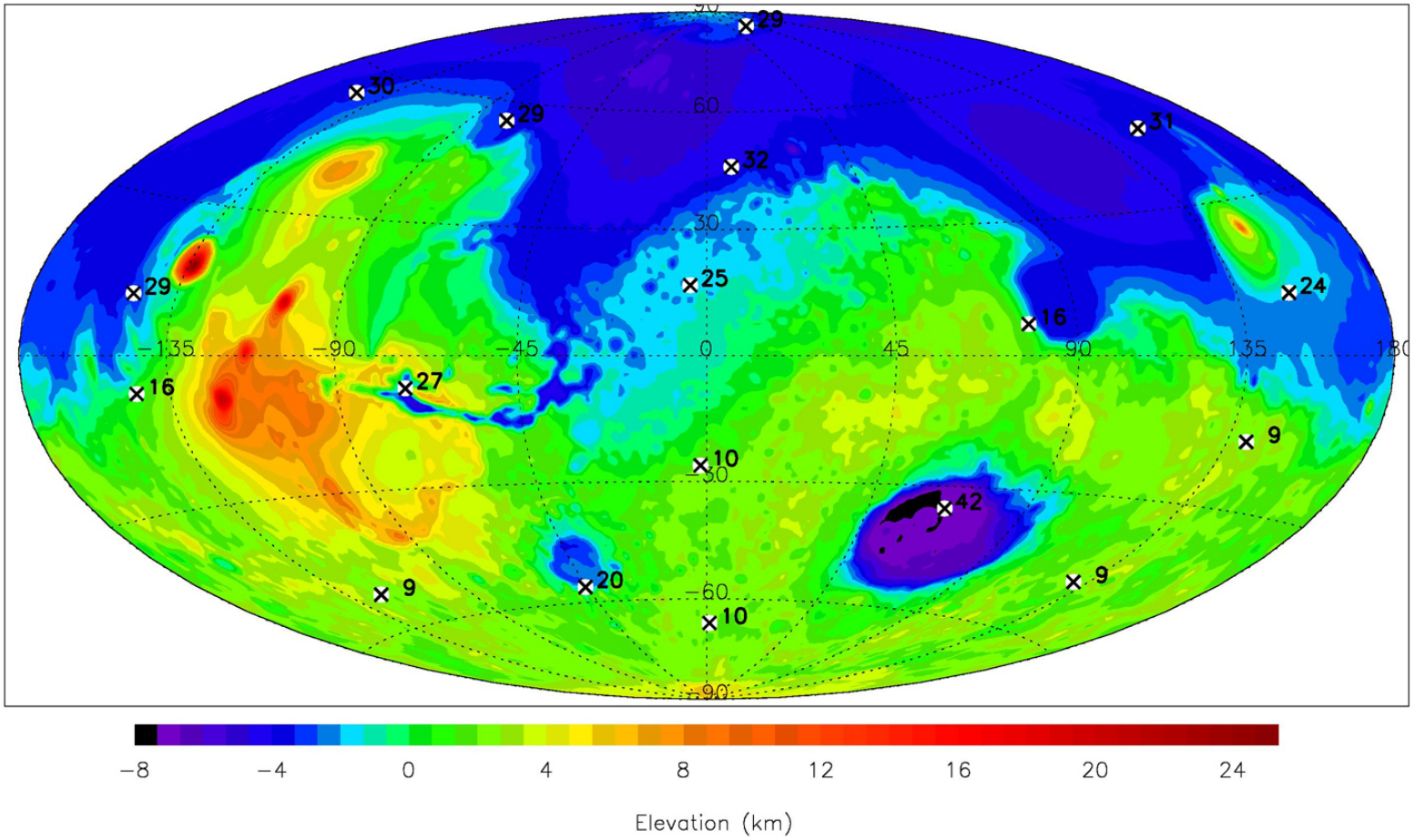

Pascal – A Mars Network Mission

Probe Entry System

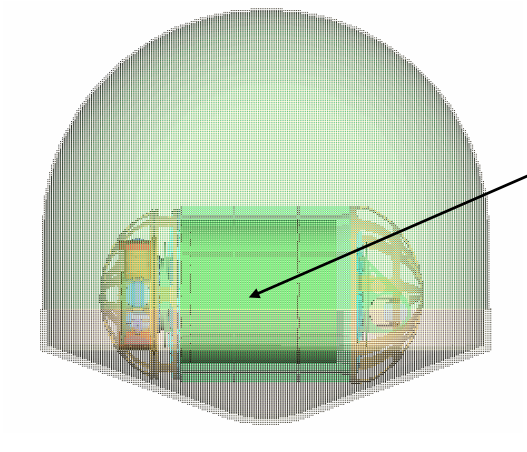

Science Station

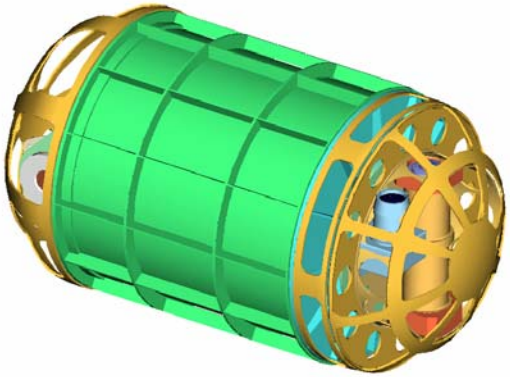

0.5 m

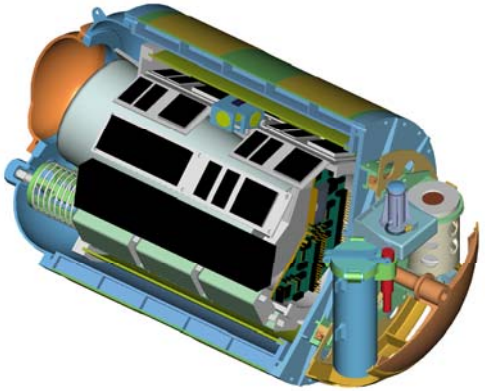

- 70° half angle cone
- Hemispherical backshell
- 20 kg entry mass
- RHU powered (Milliwatt Generator)

Conclusions

- Classic application and probe design result in sever limits to the number and frequency of probe flights
- Micro probes provide a means to increase the number of in-situ measurements
- Payload mass fraction is relatively unchanged, so micro-probe payloads need to be very focused
- However, the value that is lost in limited measurement type is regained by the number of possible samples
- Micro probe architectures posses a resiliency to individual failure due to the inherent redundancy of the system

Micro-probes have a distinct role to play in solar system exploration!