THE REACTION OF QUATERNARY AMMONIUM HALIDES WITH SODIUM

A THESIS

Presented to

the Faculty of the Graduate Division

Georgia Institute of Technology

In Partial Fulfillment

of the Requirements for the Degree

Master of Science in Chemistry

By

Elwood Parry Blanchard, Jr.

June, 1954

THE REACTION OF QUATERNARY AMMONIUM

HALIDES WITH SODIUM

Approved:

Date Approved by Chairman:

June 4, 1954

In presenting the dissertation as a partial fulfillment of the requirements for an advanced degree from the Georgia Institute of Technology, I agree that the Library of the Institution shall make it available for inspection and circulation in accordance with its regulations governing materials of this type. I agree that permission to copy from, or to publish from, this dissertation may be granted by the professor under whose direction it was written or, in his absence, by the Dean of the Graduate Division when such copying or publication is solely for scholarly purposes and does not involve potential financial gain. It is understood that any copying from, or publication of, this dissertation which involves potential gain will not be allowed without written permission.

[illegible]

ACKNOWLEDGMENT

In writing this thesis I wish to express my gratitude to the Research Corporation for the Frederick Gardner Cottrell Grant awarded to Dr. Erling Grovenstein under which this work was carried out. I also wish to express my appreciation to Dr. Grovenstein for selecting me to work under this grant and for his many helpful suggestions throughout the course of the work.

TABLE OF CONTENTS

APPENDICES Page

LIST OF TABLES

Table | Page

LIST OF ILLUSTRATIONS

SUMMARY

Part 1. The Reaction of Methyl- and n-Butyl-Substituted Quaternary Ammonium Halides with Sodium

In this work the study of the reductive cleavage of several tetraalkylammonium halides with molten sodium in dioxane-t-amyl alcohol was undertaken for the purpose of supplying information as to what saturated quaternary ammonium salts are reduced and in the case where two different alkyl groups are attached to the same nitrogen atom which alkyl group is more readily cleaved. From such data it was hoped that information could be derived pertaining to the mechanism of the reaction.

The quaternary ammonium halides studied in this work were $(CH_3)_4NCl$, $(CH_3)_3N(n\text{-}C_4H_9)Cl$, $(CH_3)_2N(n\text{-}C_4H_9)_2Cl$, $CH_3N(n\text{-}C_4H_9)_3I$, $CH_3N(n\text{-}C_4H_9)_3Br$, and $(n\text{-}C_4H_9)_4NBr$. These salts were prepared by the reaction of alkyl halides with tertiary amines and were purified by recrystallization, their purity being checked by a halogen determination. The quaternary ammonium salts were reacted with molten sodium in dioxane-t-amyl alcohol with use of a Morton high-speed stirring apparatus to obtain a larger sodium surface. The gaseous products were collected over brine and analyzed for butene in an Orsat gas analyzer. The methane and butane

were analyzed with an infra-red spectrophotometer. The amines from the reaction were semi-quantitatively recovered and identified by appropriate derivatives.

All of the quaternary ammonium salts studied were reductively cleaved in part under the reaction conditions to give saturated hydrocarbons and amines. Concurrent Hoffman elimination was also observed. For the methyl-butyl-quaternary ammonium salts the rate of reaction and the methane to butane ratio were found to increase with increase in the number of n-butyl groups. The methane to butane ratio was also found to be dependent on the concentration of the reacting ammonium salt.

The results upon the reductive cleavage of the tetraalkylammonium halides indicate that there is no one simple mechanism which will explain all of the observations. Two reaction paths are proposed to explain the observed correlations. The first of these supposes an adsorption of the ammonium ion upon the sodium surface followed by cleavage to give predominantly methane in the case of methyl-butyl-quaternary ammonium salts. The second path involves a momentary collision between the ammonium ion and a sodium particle to give predominantly butane in the case of methyl-butyl-quaternary ammonium salts.

Part II. The Reaction of Chloromethyltrimethylammonium Chloride with Sodium

The reaction of chloromethyltrimethylammonium chloride was studied in order to determine whether any rearrangement of groups takes place during the reaction.

Chloromethyltrimethylammonium chloride was prepared by the reaction of methylene chloride with trimethylamine and analyzed for both ionic and total halogen. The salt was reacted with molten sodium in anhydrous dioxane with use of a Morton high-speed stirring apparatus to obtain a larger sodium surface. The volatile amines from the reaction were collected in HCl traps and the solvent in the flask distilled in part or in whole to obtain the remaining amines. A mixture of amines was obtained from which trimethylamine was identified by preparation of its picrate. Indirect evidence was also obtained for the presence of vinyldimethylamine and ethyldimethylamine. Thus when the mixture of amines was reacted with methyl iodide, followed by moist silver oxide, and the resulting quaternary ammonium hydroxides pyrolyzed, ethylene and acetylene were identified and determined semi-quantitatively from the infra-red spectra of the gaseous products. From a typical reaction the yields of amines were trimethylamine 14.2%, ethyldimethylamine 11.4%, and vinyldimethylamine 1.3% based on the amount of ammonium salt used.

From the results of the reaction of chloromethyltrimethylammonium chloride with sodium there is evidence that a rearrangement occured in part to give ethyldimethylamine. This rearrangement is likened to the Stevens rearrangement. Two possible reaction paths are proposed for the formation of vinyldimethylamine in the reaction.

PART I

THE REACTION OF METHYL-AND *n*-BUTYL-SUBSTITUTED QUATERNARY AMMONIUM HALIDES WITH SODIUM

CHAPTER I

DISCUSSION OF PREVIOUS WORK UPON THE CLEAVAGE OF QUATERNARY AMMONIUM SALTS WITH SODIUM

The reductive cleavage of quaternary ammonium salts by reaction with a large excess of sodium amalgam in aqueous medium (occasionally in alcoholic medium) is known as the Emde degradation.[1] An example is:

$$PhCH{=}CHCH_2\overset{+}{N}(CH_3)_3\ \overset{-}{Cl} \xrightarrow[\text{steam-bath}]{H_2O} PhCH{=}CHCH_3 + N(CH_3)_3$$

Activation of one of the carbon-nitrogen bonds is required for cleavage to occur. Such activation is furnished by a point of unsaturation; e.g., a carbon-carbon double bond or a carbonyl function in close proximity to the nitrogen atom. The ease of cleavage of groups is

$$R\overset{O}{\overset{\|}{C}}CH_2\text{->}\ PhCH{=}CHCH_2\text{->}\ PhCH_2\text{->}\ CH_2{=}CHCH_2\text{->}\ Ph\text{->}\ CH_3\text{-}$$

as judged by competitive cleavage of groups from compounds such as $R\text{-}N(CH_3)_3Cl$; also apparently by qualitative observations upon rate and the amount of sodium amalgam required, i.e., competition with the reaction of sodium upon

---

[1] H. Emde, Arch. Pharm., 244, 289 (1906).

water.[2-5] The position of $CH_2{=}CHCH_2$- in the above series is based upon the work of Braun and Aust[4] who noted that

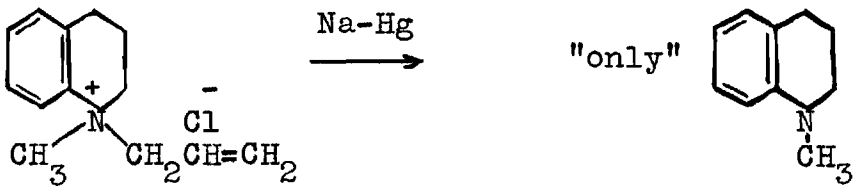

although Emde[1] states that allyltrimethylammonium iodide was not appreciably cleaved by sodium amalgam.

Gordon[6] found that allyltrimethylammonium chloride is cleaved by molten sodium in dioxane.

$$CH_2{=}CHCH_2\overset{+}{N}(CH_3)_3\ Cl \xrightarrow[\text{Na}]{\text{8 hrs.}} \underset{(22.3\%)}{CH_2{=}CHCH_3} + \underset{(6.4\%)}{CH_4} + \underset{(29.6\%)}{N(CH_3)_3}$$

Emde and co-workers report that ammonium compounds with four saturated alkyl groups are inert to sodium amalgam. Thus Emde and Runne[7] report that $(CH_3CH_2)_2N(CH_3)(CH_2CH_2OH)$ Cl resists cleavage, and Emde and Kull[1] report that N,N-dimethylpipidinium chloride is not cleaved. Gordon[6] found

---

[2]H. Emde, et.al., ibid., 249, 118, 106, (1911); 272, 469 (1934); 247, 369 (1909).

[3]P. Groenewond and R. Robinson, J. Chem. Soc., 1934, 1692.

[4]J. V. Braun, et.al., Ber., 49, 501 (1916); 55, 3803 (1922); 50, 50 (1917).

[5]T. S. Stevens, E. M. Creighton, A. B. Gordon, and M. MacNicol, J. Chem. Soc., 1928, 3193.

[6]D. A. Gordon, Ph. D. Thesis, Georgia Institute of Technology, 1953.

[7]H. Emde and A. Runne, Arch. Pharm., 249, 371 (1911).

that tetramethylammonium chloride was cleaved by molten sodium in dioxane.

$$(CH_3)_4N\ Cl \xrightarrow[Na]{17\ hrs.} \underset{(50.5\%)}{CH_4} + \underset{(6.9\%)}{CH_2{=}CH_2} + \underset{(65.5\%)}{N(CH_3)_3}$$

His conditions were more effective than those of Emde because molten sodium was used rather than sodium amalgam, dioxane (which does not react with the sodium under the reaction conditions) was used in place of water (or aqueous alcohol), and finally better mixing of reactants was accomplished by high-speed stirring.

Two mechanisms have been proposed for the reductive cleavage of quaternary ammonium salts.[6] The first of these mechanisms involves the formation of a free radical in the initial step. The second provides for the formation of a carbanion or organosodium compound in the initial step.

$$R\text{-}X + Na^{\bullet} \longrightarrow R^{\bullet} + NaX$$

$$R\text{-}X + 2Na^{\bullet} \longrightarrow \overset{-}{R}{:}\overset{+}{Na} + NaX$$

In the mechanisms proposed it has been assumed that $(CH_3)_3N$- behaves qualitatively like -Cl. The formation of a free radical has been conclusively proven for the gas phase reaction between sodium and alkyl halides by Polanyi[8]

---

[8] H. V. Hartel, N. Meer, and M. Polanyi, Z. physik. Chem., 19B, 139 (1932).

and co-workers. Support for the second mechanism has been found by Morton and co-workers who have shown the presence of organosodium compounds in the reduction of alkyl halides.[9]

Gordon[6] suggests that a study of the reaction products from the cleavage of $(CH_3)_2N(C_2H_5)_2Cl$ and similar ammonium salts should supply information on the mechanism of the reaction. If the free radical mechanism prevails there should be more ethane than methane formed. If the ionic mechanism prevails there should be more methane than ethane.

In this work the series $(CH_3)_4NCl$, $(CH_3)_3N(\underline{n}\text{-}C_4H_9)Cl$, $(CH_3)_2N(\underline{n}\text{-}C_4H_9)_2Cl$, $CH_3N(\underline{n}\text{-}C_4H_9)_3Br$, $CH_3N(\underline{n}\text{-}C_4H_9)_3I$, and $(\underline{n}\text{-}C_4H_9)_4NBr$ have been reduced with molten sodium in dioxane-<u>t</u>-amyl alcohol in an effort to supply information as to the mechanism of the cleavage. If these compounds react by the free radical mechanism we would expect a three to one ratio of butane to methane for equal numbers of methyl and butyl groups. This is calculated from the data given by Polanyi and co-workers.[8] If the ionic mechanism prevails we would expect more methane than butane.

For further information concerning the Emde reduction and the proposed mechanisms see Ref. 6.

---

[9] A. A. Morton, <u>et.al</u>., <u>J. Am. Chem. Soc</u>., <u>58</u>, 1697 (1936); <u>64</u>, 2240 (1942).

CHAPTER II

THE CLEAVAGE OF QUATERNARY AMMONIUM SALTS BY SODIUM

In this work the reaction of some quaternary ammonium salts with molten sodium in dioxane-t-amyl alcohol was studied. From the results of this work several generalizations can be made concerning the reaction and the cleavage products.

The salts studied in this work and the products obtained from the reaction with sodium are listed below. The percentages represent the values from a typical run. The moles of ammonium salt used in each run shown was between 0.05-.06 except in the case of $(CH_3)_4NCl$ in which 0.1080 mole was used.

Ammonium Salt	Products			
$(CH_3)_4NCl$	CH_4 (74.4%)	$(CH_3)_3N$ (74.0%)		
$(CH_3)_3N(n\text{-}C_4H_9)Cl$	CH_4 (27.1%)	$n\text{-}C_4H_{10}$ (10.4%)	$1\text{-}C_4H_8$ (52.6%)	$(CH_3)_3N$ $(CH_3)_2N(n\text{-}C_4H_9)$ (88.0%)
$(CH_3)_2N(n\text{-}C_4H_9)_2Cl$	CH_4 (13.9%)	$n\text{-}C_4H_{10}$ (8.66%)	$1\text{-}C_4H_8$ (74.5%)	$(CH_3)_2N(n\text{-}C_4H_9)$ $CH_3N(n\text{-}C_4H_9)_2$
$CH_3N(n\text{-}C_4H_9)_3Br$	CH_4 (70.0%)	$n\text{-}C_4H_{10}$ (14.3%)	$1\text{-}C_4H_8$[a] (15.7%)	$CH_3N(n\text{-}C_4H_9)_2$ $(n\text{-}C_4H_9)_3N$

[a]The per cent butene was calculated from the determined values for methane and butane by difference assuming 100% reaction.

Ammonium Salt	Products			
$CH_3N(\underline{n}\text{-}C_4H_9)_3I$	CH_4 (87.2%)	$\underline{n}\text{-}C_4H_{10}$ (10.3%)	$1\text{-}C_4H_8$ (5.8%)	$CH_3N(\underline{n}\text{-}C_4H_9)_2$ $(\underline{n}\text{-}C_4H_9)_3N$
$(\underline{n}\text{-}C_4H_9)_4NBr$	$\underline{n}\text{-}C_4H_{10}$ (60.9%)	$1\text{-}C_4H_8$ (16.1%)	$(\underline{n}\text{-}C_4H_9)_3N$	

The following observations were made concerning the reaction of the ammonium salts and the products resulting:

I. The rate of reaction increases with the number of n-butyl groups present in the reacting compound. (This has not as yet been established for $(\underline{n}\text{-}C_4H_9)_4Br$.))

II. The methane to butane ratio of the products increases with the number of n-butyl groups present in the reacting compound. (This observation is made when a statistical factor is taken into account and the comparisons are made at comparable concentrations of ammonium salt.)

III. The methane to butane ratio in the products increases in going from the anion bromide to iodide. (It is predicted that the ratio will increase in going from chloride to bromide. As yet no information is available using the same cation.)

IV. The elimination reaction increases and the reduction reaction decreases in going from the anion iodide to bromide. (It is predicted that the corresponding increases and decreases will be observed in going from the anion bromide to chloride. As yet no information is available using the same cation.)

V. Using the same amount of solvent and sodium, the methane to butane ratio increases with the moles of ammonium salt used.

Figure 2 illustrates the effect of n-butyl groups on the reaction time and also the effect of varying the anion (Br^- and I^-). The time of reaction for the case where four butyl groups were present is not shown. When this compound was reacted the equipment was not capable of handling a rapid reaction, and as a result the minimum sodium particle size was never obtained. Consequently the reaction time observed is believed to be much longer than the actual reaction time would have been had the compound been run in the same equipment.

Figure 1 illustrates the effect of n-butyl groups on the methane to butane ratio. (When the statistical factor is taken into account the curve for $(CH_3)_3N(n\text{-}C_4H_9)Cl$ will be below that of $(CH_3)_2N(n\text{-}C_4H_9)_2Cl$.) The figure also illustrates the effect of concentration of the ammonium salt on the methane to butane ratio. Finally, the plot illustrates the effect of varying anions on the methane to butane ratio.

From the observations it would appear that the substitution of n-butyl groups for methyl groups in the tetramethylammonium ion makes the cleavage of the ion by sodium preferential in favor of the cleavage of a methyl group.

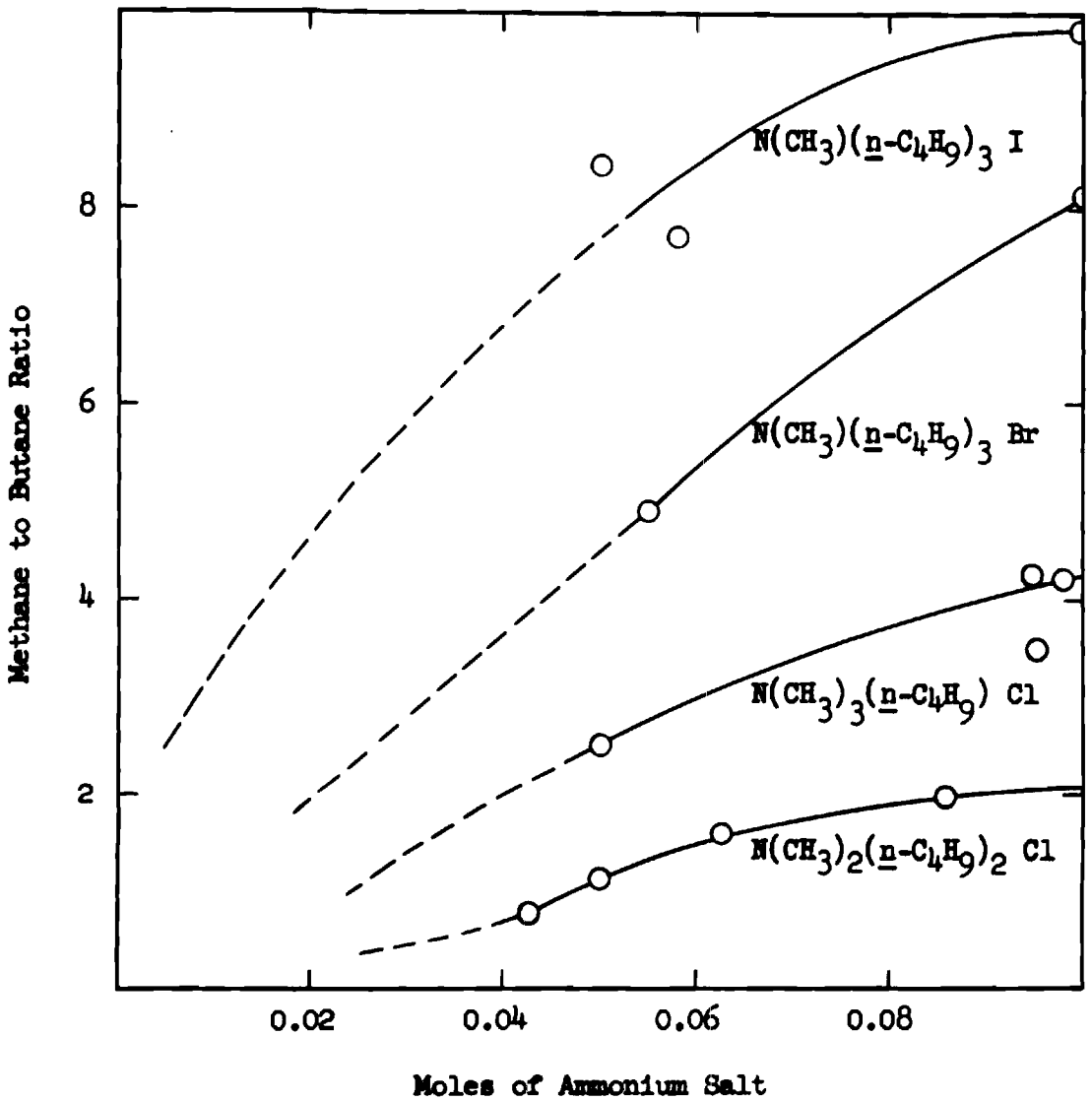

Figure 1. The methane to butane ratio versus the moles of ammonium salt of the type $N(CH_3)_{4-n}(\underline{n}\text{-}C_4H_9)_n$ X (n = 1 to 3).

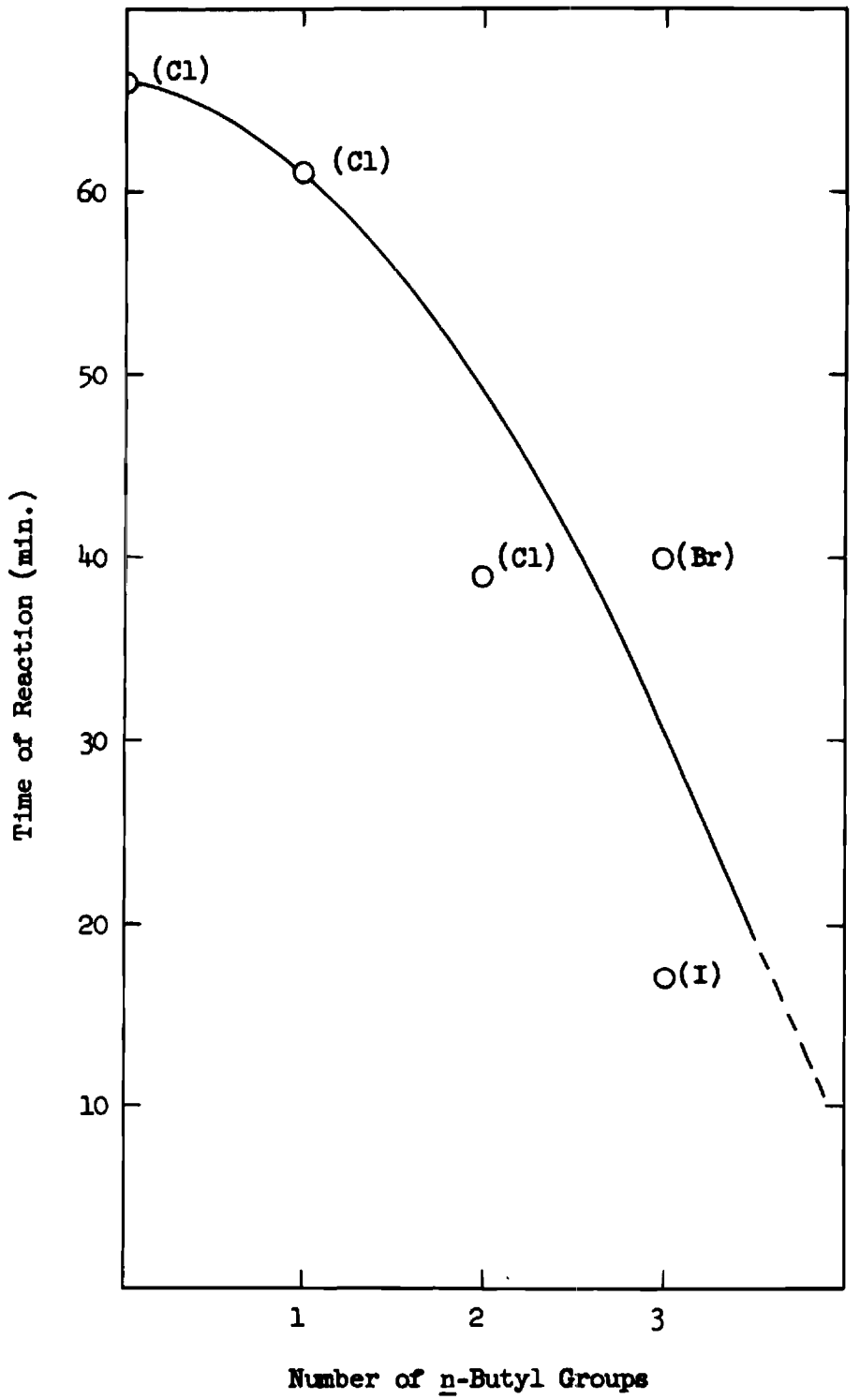

Figure 2. The number of n-butyl groups versus the time of reaction (min.) for the reaction of ammonium salts of the type $N(CH_3)_{4-n}(n\text{-}C_4H_9)_n$ X (n = 0 to 3).

It is possible that the ion may be attracted to and possibly adsorbed on the sodium particle and then the cleavage takes place. If this is the case, we might predict that the methyl group would be cleaved since the sodium particle would certainly have time to transfer two electrons to the ammonium ion and the ionic mechanism would prevail. The increase in the number of n-butyl groups in the ammonium ion may give rise to cations which are more effective agents for dispersion of the sodium. This could account for the increase in rate with increasing number of n-butyl groups which was observed in the present work. For such cases in which appreciable amounts of the quaternary ammonium ion is adsorbed on the surface of the sodium, the methane to butane ratio may differ from cases in which such adsorption is not pronounced. The preferred cleavage of methyl over n-butyl groups for compounds such as methyltri-n-butylammonium iodide may be due to a favorable orientation in the adsorption process with the result that the methyl group is in a better position for cleavage than the n-butyl group; alternatively the two electron transfer mechanisms mentioned above may determine the product composition in such cases. For cases in which adsorption is less pronounced (two or less n-butyl groups) much of the product may be formed during the brief collisions of the ammonium ion with sodium particles. In this case a limiting value

(minimum) for the methane to butane ratio of one to three (corrected for unequal numbers of methyl and butyl groups by an appropriate statistical factor) might be expected. This would be the predicted result if the collision process followed the free radical mechanism according to the relative rates of reaction for methyl and n-butyl chlorides with sodium vapor given by Polanyi and co-workers.[8]

One possible explanation for the greatly increased methane to butane ratio in going from the di-n-butyl to the tri-n-butyl substituted tetramethylammonium ion would be that the ammonium salt was first undergoing a decomposition reaction to give methyl iodide (or bromide) and tri-n-butylamine and then the methyl halide reacted readily with sodium. An experiment was made to determine the amount of decomposition of $CH_3N(n\text{-}C_4H_9)_3I$ in the solvent and at the temperature used for the sodium reactions. It was calculated from the results of this experiment and from known data that using 0.0809 mole of ammonium salt the maximum amount of methyl iodide that would be formed during the time of an average reaction would be less than 10^{-11} mole. (See Appendix B for the calculation and the assumptions used.) This amount of decomposition is obviously too small to account for the reaction observed and thus the decomposition mechanism is not plausible.

CHAPTER III

SUGGESTIONS FOR FUTURE EXPERIMENTAL WORK

The reactions of quaternary ammonium salts of the type $N(CH_3)_{4-n}(\underline{n}\text{-}C_4H_9)_n$ X (where n = 1 to 3) should be studied to ascertain the variation of the methane to butane ratio at higher and lower concentrations of ammonium salts than used in this work. Such a study would tell whether the methane to butane ratio approaches a maximum and thus becomes approximately independent of the salt concentration at high concentrations of salt, and whether all the compounds exhibit the same minimum ratio at low salt concentrations. In this work the bromides or iodides (one or the other, not both) should be used since all these are expected to be readily crystalline and by working with the same anion the effect of anion would be constant.

A preliminary study of the cleavage of the salts in the series $N(CH_3)_{4-n}(C_2H_5)_nX$ (where n = 0 to 4) should be undertaken to determine if the elimination reaction is too great for a study of the cleavage of these salts. If the elimination reaction is not too great, it would be very desirable to study this series from the standpoint of amine isolation from the products. For these compounds the amines could be distilled directly from the reaction mixture and

determined quantitatively by titration with acid.

The reaction of $(\underline{n}\text{-}C_4H_9)_4NBr$ should be studied using equipment such that maximum stirring could be used. This study would provide information on its rate of reaction which could be compared with the rates of reaction of the remaining compounds in the series.

The study of the reaction of $ClCH_2N(CH_3)_3$ Cl with sodium in dioxane should be continued in order that more quantitative information as regards the products could be obtained. A change in the technique in distilling the amines from the reaction flask is also suggested. After the reaction has reached completion the system should be swept with nitrogen and then the Vigreaux column replaced by a bent tube connected to a water cooled condenser. In this way the amines should distill readily without appreciable decomposition especially if the vacuum of a water aspirator were applied. The isolation and identification of any products of reaction of the solvent dioxane with intermediate carbanions would also be of interest. The reaction of $ClCH_2N(CH_3)_3Br$ with sodium in dioxane should also be carried out to determine if the products are the same as obtained in the reaction of $ClCH_2N(CH_3)_3Cl$. The products remaining in the reaction flask should also be isolated and identified to determine what happened to the other 60-65% of the ammonium salt which did not form volatile amines.

CHAPTER IV

EXPERIMENTAL DETAILS

Materials Used and Methods of Purification

Tert-Amyl Alcohol: The Matheson Co., Inc. grade was refluxed over sodium and distilled from sodium, b.p. 101.0-102.0° at 736.1 mm.

Tert-Butanol: Eastman Kodak white label grade was refluxed over sodium and distilled from sodium, b.p. 82.0° at 739.5 mm.

1-Bromobutane: Eastman Kodak practical grade was distilled, b.p. 99.5-99.8° at 741.85 mm.

1-Chlorobutane: Eastman Kodak white label grade was distilled, b.p. 77.0-77.4° at 738.4 mm.

Cyclohexanone: Barrett Chemical sample, lot no. 9436, and student prepared cyclohexanone was distilled, b.p. 153.0-154.0°.

Diethyl Ether: Commercial absolute ether was dried and stored over fresh sodium wire in brown screw cap bottles.

1,4-Dioxane: Practical grade dioxane was purified by the method described by Fieser[10] and stored over fresh

---

[10] L. F. Fieser, Experiments in Organic Chemistry, D. C. Heath & Company, New York, 1941, 2nd ed., p. 369.

sodium wire in brown screw cap bottles, b.p. 100.5° at 739.1 mm.

Dimethylamine: Eastman Kodak white label grade anhydrous dimethylamine was used without further purification.

Ethanol: Commercial absolute ethanol was purified by the method described by Fieser[11] b.p. 77.4° at 738.4 mm.

Isopropanol: Commercial grade was refluxed over calcium oxide for 24 hours and distilled, b.p. 80.7-81.0° at 736 mm.

Methanol: Commercial grade was purified by the method described by Fieser,[12] b.p. 64.0° at 737.8 mm.

Methyl Chloride: The Matheson Co., Inc., 99.5% purity grade used without further purification.

Methylene Chlorobromide: Eastman Kodak white label grade was distilled, b.p. 66.9-67.0° at 737.4 mm.

Methylene Chloride: Eastman Kodak white label grade was distilled by Dr. E. Grovenstein, b.p. 38.5-39.0° at 735 mm.

Nitrobenzene: Eastman Kodak practical grade was distilled, b.p. 207-213° at 739.6 mm.

Trimethylamine: Eastman Kodak white label grade, 25 per cent in methanol used without further purification.

Tri-*n*-butylamine: Eastman Kodak white label grade was distilled, b.p. 211.0-211.3° at 738.1 mm.

---

[11] *Ibid.*, p. 359.

[12] *Ibid.*, p. 360.

Xylene (mixed): Eastman Kodak technical grade was washed with concentrated H_2SO_4 and then with water, dried over $CaCl_2$ and distilled, b.p. 129.5-139.0° at 741.85 mm.

Butane: Matheson Co., Inc., extra pure grade (99.9%) was used without further purification.

Acetone: Commercial grade was dried over $MgSO_4$.

Methane: Matheson Co., Inc., c.p. grade (99%) was used without further purification.

Methyl Bromide: Matheson Co., Inc., grade was used without further purification.

Methyl Ethyl ketone: Eastman Kodak practical grade was dried over magnesium sulfate and distilled, b.p. 78.0-79.0° at 733.3 mm.

Methyl Iodide: The Matheson Co., Inc. grade was used without further purification.

Preparation of Quaternary Ammonium Salts

Tetramethylammonium Chloride.--Methyl chloride (0.6 mole) was dissolved in one liter of commercial methanol and mixed with trimethylamine (0.575 mole)(180 ml. of 3.2 N methanolic solution) in a two-liter pyrex bottle. The bottle and reactants were stored at $0^{\circ}C$. in an ice-water bath for four hours and then placed in the refrigerator for 80 hours. At this time the reaction was found to be 95.8 per cent complete as determined by titration of the unreacted amine with HCl solution. The methanol, methyl chloride, and trimethylamine were distilled with the aid of a water aspirator on the steam bath. The salt was dried in the vacuum oven at 50° and stored in a P_2O_5 dessicator. The crude yield was 78.5 per cent based on amine used. The salt was recrystallized from t-butanol using a Soxhlet extractor. The purified yield was 77.8 per cent based on amine used.

n-Butyltrimethylammonium Chloride.--n-Butyl chloride (1.00 mole) was mixed with trimethylamine (1.00 mole) (470 ml. of 2.13 N methanolic solution) and stored in a brown glass bottle for about 70 days at room temperature. At the end of 50 days the reaction was found to be 91.6 per cent complete as determined by titration of the unreacted amine with HCl solution. At the end of 70 days the methanol, butyl chloride, and trimethylamine were distilled. The salt was recrystallized from isopropanol using a Soxhlet

extractor. At this point there was a 73.5 per cent yield of semi-pure product. The salt was then recrystallized from isopropanol and then from an isopropanol-ether mixture. At this point there was a 64.2 per cent yield based on the amine used.

Dimethyldi-n-butylammonium Chloride.--The n-butyldimethylamine (.465 mole) prepared by the procedure given under "Preparation of Amines" was mixed with n-butyl chloride (.523 mole) in 150 ml. of methyl ethyl ketone and heated to reflux. The mixture was refluxed for ten days between 79.5-81.5°. At the end of ten days the reaction was found to be 97 per cent complete as determined by titration of the unreacted amine with HCl solution. The reaction mixture was cooled in the refrigerator overnight whereupon needle-like crystals of salt precipitated. These crystals were filtered and washed with two portions of dry ether. The salt was dried in the vacuum oven for two hours at 50°. The yield was 0.343 moles or 74 per cent yield based on amine. The halide analysis indicated that no further purification was necessary.

Methyltri-n-butylammonium Chloride.--Methyl chloride (about .5 mole) was dissolved in 125 ml. of methanol and mixed with tri-n-butylamine (.25 mole) in the liner of the steam bomb. The mixture was heated in the steam bomb for about six days

at which time the reaction was found to be 58.8 per cent complete as determined by titrating the unreacted amine with HCl solution. The methanol and methyl chloride were distilled. The remaining oily liquid was cooled in the refrigerator and treated with several portions of dry ether. After some two or three weeks a few crystals were isolated from the oil. They were too few to perform a chloride determination. The method was abandoned due to the poor yield and difficulty in crystallizing the product.

Tetra-n-butylammonium Chloride.--Procedure I. n-Butyl chloride (.50 mole) was mixed with tri-n-butylamine (.50 mole) in the liner of the steam bomb. The mixture was heated in the steam bomb for 12 days and found to be 22.2 per cent reacted as determined by titration of the unreacted amine with HCl solution. At this time the mixture was transferred to a flask and refluxed for seven days. Then 400 ml. of nitrobenzene was added and the mixture refluxed for four days between 171-177°. The reaction mixture had a dark brown color. The reaction was found to be 86.7 per cent complete at this time. The solution was treated with decolorizing charcoal in isopropanol. After removing most of the isopropanol by distillation the remainder of the solution was treated with dry ether. About 15 g. of white salt was isolated from the reaction. The chloride analysis indicated that this salt was not the

desired product tetra-n-butylammonium chloride. The analysis gave however the correct value for the hydrochloride of di-n-butylamine. (Calc. 20.9%, Found 21.2%). The hydrochloride of known di-n-butylamine was prepared and its melting point found to be 300.2-301°. The salt obtained from the reaction melted at 299-300°. A mixed melting point of these two salts was found to be 299.6-300.2°. The addition of concentrated NaOH to the product of the reaction gave the odor of di-n-butylamine rather than that of tri-n-butylamine. It was not found possible to prepare a picrate of the amine. The benzenesulfonamides were prepared from the known salt and the salt obtained from the reaction according to the method of Shriner and Fuson,[13] and were found to be oils. This result was in agreement with the work of Marvel and Gillispie.[14]

Procedure II. Butyl chloride (.50 mole) was mixed with tri-n-butylamine (.50 mole) and 400 ml. of cyclohexanone in a one-liter flask. The mixture was refluxed for 26 days between 132-145°. At this time the reaction was found to be 11.4 per cent complete. The mixture was transferred to a large bomb and heated for one and one-half days between room temperature and 200° and for three and one-half

---

[13] R. L. Shriner and R. C. Fuson, Identification of Organic Compounds, John Wiley & Sons, Inc., New York, 3rd ed., p. 91.

[14] C. S. Marvel and H. B. Gillispie, J. Am. Chem. Soc., 48, 2943 (1926).

days at about 200°. The bomb was opened and the mixture was found to consist of a greenish salt and some liquid. The salt was filtered and the liquid mixed with isopropanol. It was not found possible to isolate any salt from the liquid. The salt filtered gave a positive chloride test with silver nitrate solution and a positive iron test with KCNS solution. The salt was not soluble to any extent in isopropanol. It appears that decomposition took place in the bomb and the iron in the bomb formed chlorides with the decomposition products. The green salt was probably either $FeCl_2$ (green-yellow) or $FeCl_2 \cdot 4H_2O$ (blue-green).[15]

Tetra-n-butylammonium Bromide.--Procedure I. n-Butyl Bromide (.75 mole) was mixed with tri-n-butylamine (.75 mole) and 250 ml. of mixed xylenes in a one-liter flask. The mixture was refluxed for three days between 131.5-139.5°. At the end of this time the reaction was found to be 97.8 per cent complete. (At the end of one day 0.075 mole of additional butyl bromide was added to the reaction mixture.) The xylenes and unreacted butyl bromide were removed by distillation under vacuum and the remaining liquid stored in the refrigerator. The product was then dissolved in acetone (200 ml.) and dry ether (2000 ml.) added and the solution cooled in a dry ice-acetone bath. The crystals

---

[15] Handbook of Chemistry and Physics, Chemical Rubber Publishing Co., Cleveland, Ohio, 28th ed., 1944, p. 394.

were filtered and dried in the vacuum oven. The yield was 73.5 per cent. The bromide determination for this compound was not the correct value for tetra-n-butylammonium bromide. It was however nearly the correct value for the hydrobromide of tri-n-butylamine. (Calculated for $Bu_3N \cdot HBr$ 28.93%, Found 29.38%, 29.41%. Calculated for Bu_4N Br 24.82%). From this it appears that an elimination reaction took place during the refluxing and the hydrobromide of tri-n-butylamine was formed.

Procedure II. n-Butyl bromide (1.00 mole) was mixed with tri-n-butylamine (0.925 mole) in 250 ml. of methyl ethyl ketone. The reaction mixture was refluxed for three days at about 88°. At the end of this time the reaction was found to be 90.5 per cent complete and additional n-butyl bromide (.10 mole) was added to the reaction mixture. The mixture was refluxed for one more day and the reaction was found to be 95.5 per cent complete as determined by titration of the unreacted amine with HCl solution. The mixture was cooled and about 500 ml. of dry ether added. After standing overnight in the refrigerator a large quantity of crystals had precipitated. The crystals were filtered and a crude yield of 93 per cent obtained. The halide analysis indicated that this product was sufficiently pure tetra-n-butylammonium bromide to use without further purification.

Tetra-n-butylammonium Chloride.--Procedure III. Crystals of tetra-n-butylammonium bromide (about 1 mole) were treated with four methanolic HCl solutions containing 5.9, 6.9, 7.4, and 5.9 moles of HCl respectively. Each time the mixture was heated on the steam bath and the methanol, HBr, and unreacted HCl were removed by distillation. After the fourth treatment the product gave no bromine test with chlorine water. The oily liquid was then treated with three portions of dry benzene (two 200 ml. and one 150 ml. portions) and the benzene distilled. The final distillation was aided by the vacuum of a water aspirator. On cooling in the refrigerator the oil crystallized. It was dissolved in 160 ml. of methyl ethyl ketone and then one liter of dry ether added. After standing in the refrigerator for several days large white crystals were obtained along with some oil phase. The crystals were filtered and dried in the vacuum oven for 36 hours at 72°. The crystals had changed to an oil at this time. The oil was dissolved in 200 ml. of methyl ethyl ketone and treated with 800 ml. of dry ether. After several treatments with dry ether the oil still failed to crystallize. It was again treated with three portions of dry benzene and the benzene distilled in an attempt to remove adhering solvent. After the final benzene treatment the benzene was removed with the aid of a water aspirator on the steam bath. The oil was cooled and treated with about 500 ml. of dry ether and placed in the refrigerator.

After standing in the refrigerator for several weeks no crystals formed and the method of preparation was abandoned.

Methyltri-n-butylammonium Iodide.--Tri-n-butylamine (1.00 mole) was dissolved in 250 ml. of methyl ethyl ketone and the mixture cooled in an ice-water bath. Methyl iodide (1.1 mole) was added and the reaction took place rapidly at 0°. At the end of one hour a large quantity of salt had precipitated. A one ml. portion of the reaction mixture was titrated with HCl solution (about 0.1 N) and one drop was more than enough to neutralize the unreacted amine. The flask was then stored in the refrigerator. Dry ether (500 ml.) was added to the mixture and the salt filtered. The salt was dried in the vacuum oven overnight at 52°. The crude yield was 96.6 per cent. The salt was recrystallized from 400 ml. of ethyl acetate and 100 ml. of methanol. The purified yield was 88.6 per cent.

Methyltri-n-butylammonium Chloride.--Methyltri-n-butylammonium iodide (0.20 mole) was treated with three methanolic HCl solutions containing 1.85, 1.80, and 1.80 moles of HCl. In each case the solution was heated on the steam bath and the HI, HCl, and methanol distilled. After three treatments the oil remaining gave a negative iodide test with chlorine water. The oil remaining was stored in the refrigerator but failed to crystallize. Attempts to recrystallize the oil from ethyl acetate, acetone, and dioxane all

failed. The method of preparation was then abandoned.

Methyltri-n-butylammonium Bromide.--Methyl bromide (0.8 moles) was dissolved in 250 ml. of acetone and tributylamine (0.50 mole) added. The mixture was shaken in a one liter stoppered flask for several minutes. At this time the solution was getting warm and therefore was immersed in an ice-water bath. After two hours it was removed from the bath and allowed to react at room temperature for four hours. It was then cooled in the refrigerator and about 700 ml. of dry ether added. A large quantity of white crystals precipitated. After standing overnight in the refrigerator the ether was decanted and 250 ml. of fresh ether added and the mixture shaken well. After another day in the refrigerator the salt was filtered and dried in the vacuum oven at 50°C. The crude yield was 96.5 per cent based on the amine used. The halogen determination indicated that no further purification was necessary.

Preparation of Amines

n-Butyldimethylamine.--n-Butyldimethylamine was prepared in the following manner. Dimethylamine (2.22 moles) was mixed with n-butylchloride (2.22 moles) in a two liter glass bottle with 1600 ml. of absolute ethanol. At the end of 56 days an aliquot of the reaction mixture was titrated for unreacted amine with HCl solution and found to be 68.5 per cent reacted. At this time n-butyl bromide (0.70 mole) was added in an amount equivalent to the unreacted amine present. At the end of 66 days the reaction was found to be 89.5 per cent complete by a similar titration of unreacted amine. At this time about 875 ml. of ethanol was removed from the product by distillation and the remaining solution treated with freshly prepared silver oxide from 2.69 moles of silver nitrate. It was shaken in the shaking machine for eight hours and allowed to stand overnight. The silver salts and unreacted silver oxide were filtered and the solution distilled through a Claisen head, the salts in the flask being pyrolyzed. Much dark tar remained in the distillation flask. The product of the distillation existed in two phases. The phases were separated and an attempt made to isolate the amine by distillation of each phase. The fractionation failed to give any product boiling at 95°C. where the desired amine should boil.[16] The two

---

[16] H. T. Clarke, J. Chem. Soc., 103, 1696 (1913).

phases were combined and treated with an excess of concentrated HCl. The ethanol and most of the water were removed by distillation. The remaining material was treated with an excess of concentrated KOH solution and distilled. Again two phases were present. The amine phase was separated and refluxed over solid KOH for one hour and allowed to stand over solid KOH overnight. The amine was distilled and 0.228 mole of material boiling at 93°C./737 mm. collected. The yield was 10.3 per cent based on the dimethylamine used.

A second run was made to prepare this amine according to the following scheme. n-Butyl bromide (2.66 moles) was dissolved in 225 ml. of methanol and dimethylamine (2.22 moles) added and the mixture placed in an ice-water bath. A vigorous reaction took place subsiding after about 30 minutes. The reaction mixture was stored in the refrigerator for 20 hours at which time the reaction was found to be 77.1 per cent complete as determined by titration of aliquot of the solution with HCl. The mixture was then allowed to react at room temperature for one day at which time it was found to be 99.7 per cent reacted by an HCl titration of an aliquot of the solution. The methanol was then distilled on the steam bath and the remaining liquid cooled. About 250 ml. of water was added to the liquid and then transferred to a two liter pyrex bottle. This solution was then treated with an excess of freshly

prepared moist silver oxide from 454 g. of silver nitrate. The mixture was shaken in a shaking machine for 20 hours. The silver salts were then filtered and the solution tested for halide with silver nitrate, none being found. The solution was then distilled through a Claisen head and the salts pyrolyzed. The distillate was treated with an excess of solid NaOH and the amine layer separated. During the separation the separatory funnel broke and about four-fifths of the product was lost. The amine recovered was refluxed over solid NaOH for one hour and then allowed to stand over the NaOH overnight. The amine was then distilled and 25 g. of product boiling at $93^{\circ}/738$ mm. collected. The yield was 12.35 per cent based on the dimethylamine used. It is felt the yield would have been between 50-60 per cent if most of the product had not been lost. The reason the yield was better in the second preparation is believed to be due to the incomplete conversion of the halides in the first case where the solvent was ethanol for the most part.

Methyldi-n-Butylamine.--Dibutylamine (0.2 mole) was mixed with about 100 ml. of acetone and methyl iodide added. The mixture was allowed to react at room temperature for several days and then treated with an excess of concentrated NaOH solution and allowed to stand at room temperature for several days. The mixture was then distilled and the salts remaining pyrolyzed. The distilled material was then treated

with an excess of solid NaOH and the amine separated. The amine was refluxed with acetic anhydride for four hours to combine with any water and unreacted secondary amine and then distilled. About 15 g. of material boiling between 162.0-162.5°/731 mm. was collected for a 52 per cent yield based on the amine used.

Quantitative Halogen Determination

All halogen determinations were made volumetrically. In the case of ionizable halogen determinations the following scheme was used. The sample contained in a weighing bottle was dried, generally overnight, in the vacuum oven and then weighed. The salt was then transferred to a 250 ml. flask and the weighing bottle washed several times with distilled water. The weighing bottle was then dried in a 95°C. oven and reweighed. The weight of the salt was thus determined by the difference in the two weights. The salt solution was then diluted to about 100 ml. with distilled water and titrated with about 0.1 N silver nitrate solution using five drops of 0.5% dichlorofluorescein (for Cl^- or Br^- determinations) in 70% aqueous ethanol as an absorption indicator. About one per cent before the equivalence point the silver halide started to flocculate and at the end point the solution color changes from a yellow-buff to a pink-red. The silver halides that precipitated had a deep red color.

In the case of total halogen determination a preliminary digestion was necessary before the above volumetric scheme could be followed. The sample was weighed in a similar manner but in this case transferred to a 100 ml. boiling flask and the weighing bottle rinsed with about 25-30 ml. of anhydrous isopropanol. A reflux condenser was connected to the flask and about two g. of sodium added in small pieces. The mixture was allowed to reflux for about three hours at which time about two more grams of sodium was added and the mixture again refluxed for two or three hours. At this time the flask was allowed to cool and about ten ml. of ethanol added to destroy any remaining sodium. The contents of the flask were then transferred to a 250 ml. volumetric flask and diluted to 250 ml. with the washings from the digestion flask and distilled water. Aliquots of this sample were taken and neutralized with dilute nitric acid to the phenolphthalein end point. They were then titrated to the dichloroflourescein end point as described above.

In the case of $CH_3N(\underline{n}\text{-}C_4H_9)_3I$ and the total halogen determination upon $ClCH_2N(CH_3)_3Br$ a potentiometric titration was carried out since the indicator did not give a sharp end point. The samples were prepared by the methods given above respectively and then were titrated with about 0.1 N silver nitrate solution. The conductivity of the solution was plotted against the volume of silver nitrate added and

the end point taken as that where the curve exhibited a maximum slope.

For the results of the halogen determinations see Table 1.

Physical Characteristics of Ammonium Salts

Solubility

The compounds prepared were found to be very soluble in water, methanol, ethanol, and in some cases acetone; reasonable soluble in isopropanol, and methyl ethyl ketone; and essentially insoluble in anhydrous ether and dry dioxane. Of particular interest is the fact that $(CH_3)_4NCl$, $ClCH_2N(CH_3)_3Cl$ were insoluble; $(CH_3)_3N(\underline{n}\text{-}C_4H_9)Cl$ moderately soluble; and $(CH_3)_2N(\underline{n}\text{-}C_4H_9)_2Cl$, $CH_3N(\underline{n}\text{-}C_4H_9)_3I$, $CH_3N(\underline{n}\text{-}C_4H_9)_3Br$, $(\underline{n}\text{-}C_4H_9)_4NBr$ soluble in the respective solvents used in this work for the reactions with sodium in the high-speed stirring apparatus.

Recrystallization

In many cases recrystallization was not necessary due to the purity of the crude product as determined by halogen analysis. In the case of $(CH_3)_4NCl$ the recrystallization was carried out in a Soxhlet type extractor, protecting the system from moisture with a $CaCl_2$ drying tube. In the remaining cases demanding recrystallization it was found that the compounds were sufficiently non-hydroscopic

Table 1. Results of Halide Analyses

Compound	Temperature dried at °C	Solvent	% Halide Found	% Halide Calc.
$(CH_3)_4N\ Cl$	70	isopropanol	31.84 32.25	32.36
$ClCH_2N(CH_3)_3\ Br$	70	methanol	42.43 42.58 42.22 61.04(a) 60.44(a) 60.80(a)	42.41 61.23(b)
$ClCH_2N(CH_3)_3\ Cl$	70	acetone	24.45 24.40 49.28 49.28	24.61 49.22(b)
$(CH_3)_3N(\underline{n}\text{-}C_4H_9)\ Cl$	70	isopropanol	23.40 23.15	23.40
$(CH_3)_2N(\underline{n}\text{-}C_4H_9)_2\ Cl$	50	methyl ethyl ketone	18.32 18.26	18.33
$CH_3N(\underline{n}\text{-}C_4H_9)_3\ I$	70	ethyl acetate and methanol	38.48(a)	38.82
$CH_3N(\underline{n}\text{-}C_4H_9)_3\ Br$	50	acetone	28.36 28.51	28.51
$(\underline{n}\text{-}C_4H_9)_4N\ Br$	53	methyl ethyl ketone	24.54 24.60	24.79

(a) This value determined by a potentiometric titration. The remaining analyses were run using adsorption type indicators.

(b) This value represents the total halogen determination. The other values in the table represent ionizable halogen.

to allow conventional means of recrystallization. Care was taken however to prevent the entrance of moisture during these operations.

Melting Points

The melting points of the quaternary ammonium halides and their picrates, where they formed, were determined according to the following scheme. The compounds were dried in the vacuum oven at about 50°C. and then samples put in melting point tubes and these in turn dried overnight in the vacuum oven at about 50°C. They were then stored in a P_2O_5 dessicator until the melting point was run. The melting points were all determined in an electrically heated block according to the following method. The first sample was heated rapidly to determine the approximate melting point, the block was cooled about ten degrees below this temperature, and a second sample was put in and heated slowly to the melting point. The block was then cooled about five degrees below this point and a third sample put in and heated slowly (one degree per minute) to the melting point. This procedure was followed until a constant value for the melting point was found. See Table 2 for results.

Derivatives

The picrates of the salts were prepared by adding a

Table 2. Melting Points of Quaternary Ammonium Salts and Picrates

Compound	Melting Point °C Obs.	Lit.	Ref.	Picrate m.p. °C Obs.	Lit.	Ref.
$(CH_3)_4N\ Cl$	358-60(a)	230	(17)	325-6(a)		
$ClCH_2N(CH_3)_3\ Cl$	165.8-6.2(b)			253-4(a)		
$ClCH_2N(CH_3)_3\ Br$	162.6-3.4			254-5(a)		
$(CH_3)_3N(\underline{n}\text{-}C_4H_9)\ Cl$	223.7-4.0					
$(CH_3)_2N(\underline{n}\text{-}C_4H_9)_2\ Cl$	148-9					
$CH_3N(\underline{n}\text{-}C_4H_9)_3\ Br$	120.5-1.5					
$CH_3N(\underline{n}\text{-}C_4H_9)_3\ I$	187.4-8.0					
$(\underline{n}\text{-}C_4H_9)_4N\ Br$	116.6-7.4	114-6.5	(18)	89.6-90.6	90-3	(19)
$(CH_3)_3N$				215-6(c)	216	(20)
				224.5-5.5(a)(d)	225	(21)
$(CH_3)_2N(\underline{n}\text{-}C_4H_9)$				96.6-7.6	96	(16)
$CH_3N(\underline{n}\text{-}C_4H_9)_2$				86.6-7.4		
$N(\underline{n}\text{-}C_4H_9)_3$				106.6-7.6	105-6	(19)

(a) The compound melted with decomposition.

(b) The compound melted with some decomposition.

(c) The melting point was determined with fast heating, ca. 3-4° per minute.

(d) The melting point was determined with slow heating, ca. 1° per minute. This was the same sample that the observation using fast heating was observed.

(17) I. M. Heilbron, "Dictionary of Organic Compounds", Oxford University Press, New York, N.Y., 1943, vol. 3, p. 722.

(18) R. E. Buckles and J. P. Yuk, J. Am. Chem. Soc., 75, 5048 (1953).

(19) I. M. Heilbron, op. cit., p. 811.

(20) Ibid., p. 849.

(21) S. M. McElvain, "The Characterization of Organic Compounds", Macmillan Company, New York, N.Y., 1945, p. 214.

10 ml. ethanolic solution of the salt to about 25 ml. of a saturated ethanolic picric acid solution. In some cases it was necessary to warm the mixture on the steam bath for a few minutes. The picrates of $(CH_3)_3N(\underline{n}\text{-}C_4H_9)Cl$, $CH_3N(\underline{n}\text{-}C_4H_9)_3Br$, $(CH_3)_2N(\underline{n}\text{-}C_4H_9)_2Cl$, $CH_3N(\underline{n}\text{-}C_4H_9)_3I$ failed to form from ethanolic, etherial, and methanolic picric acid solutions. The picrates were recrystallized from ethanol and then washed with dry ether and dried in the vacuum oven.

The picrates of the amines were formed by adding about one ml. of the amine to a saturated ethanolic picric acid solution and the picrate filtered and then recrystallized from ethanol. They were then dried in the vacuum oven prior to the melting point determination.

Apparatus Used for Sodium Reactions and Gas Analyses

The same general apparatus was used for all of the reactions of the quaternary ammonium salts except for slight alterations made during the course of the work. This apparatus consisted of a 500 ml. creased three-neck Morton flask with an inverted cone in the bottom connected, by means of a rubber stopper, to a high speed stirrer.[22] In one arm of the flask was fitted a bent tube, and into

---

[22]The stirring apparatus used is similar to that used by A. A. Morton and L. M. Redman, Ind. Eng. Chem., 40, 1190 (1948).

this was attached a Vigreux column of about 15 inches in length. The column was connected to the flask by means of a one-hole rubber stopper that had previously been boiled in alkali, as had also the stopper connecting the stirrer housing to the flask. In the remaining arm was placed a thermometer well, except in cases where compound was added during the course of the reaction in which cases a rubber tube joined the arm to a flask containing the quaternary ammonium salt. To the system were connected two mercury bubblers, one allowing N_2 to enter the system in case it went under vacuum, and the other to allow gases to escape if the pressure became too high in the system. A 250 ml. safety trap was used between the gas take-off at the top of the condenser and the amine traps. The gas lines were connected in such a way that the system could be swept with N_2 before and after each run. This set-up will be referred to as Apparatus I in the discussion of the individual reactions. The major departure from this apparatus consisted in connecting the gas outlet on the stirrer housing to the bottom of the Vigreux column by means of a rubber tube, and placing a 500 ml. flask as a trap for distilled solvent at the top of the column. This set-up shall be referred to as Apparatus II and is that shown in the figure on page 40. A third deviation consisted of the same set-up as Apparatus I except that the

500 ml. flask was present at the top of the column. In Apparatus II and III the column was connected by standard taper fittings rather than a rubber stopper. In all cases the connections were wired or held by rubber bands to prevent leaks. The tubing used was butyl rubber heavy wall tubing. The HCl bubblers used were two standard 500 ml. bubblers and one bubbler utilizing a fritted glass filter stick. Where no amine was expected to come into the traps, only the fritted glass bubbler was used. The gases were collected in a ten liter inverted bottle filled with a saturated brine solution contained in a 20 gallon wash tub. During the reaction the rubber tubing was clamped at point "r" and during the sweeping with nitrogen at only points "s" as shown in figure 4.

The gases were analyzed for unsaturates, and in the case of $(CH_3)_4NCl$ and $(\underline{n}\text{-}C_4H_9)_4NBr$ for methane and butane respectively, using an Orsat type gas analyzer. In the remaining runs the methane and butane were determined by infra-red analysis. A gas handling system as shown in Figure 3 was used to fill the gas cell.

Gas Sampling and Analysis Technique

In the case of the gaseous products from the reactions of $(CH_3)_4NCl$ and $(\underline{n}\text{-}C_4H_9)_4NBr$ the general procedure was to take about a 50 ml. sample and check for unsaturates in a 22 per cent mercuric sulfate in 22 per cent

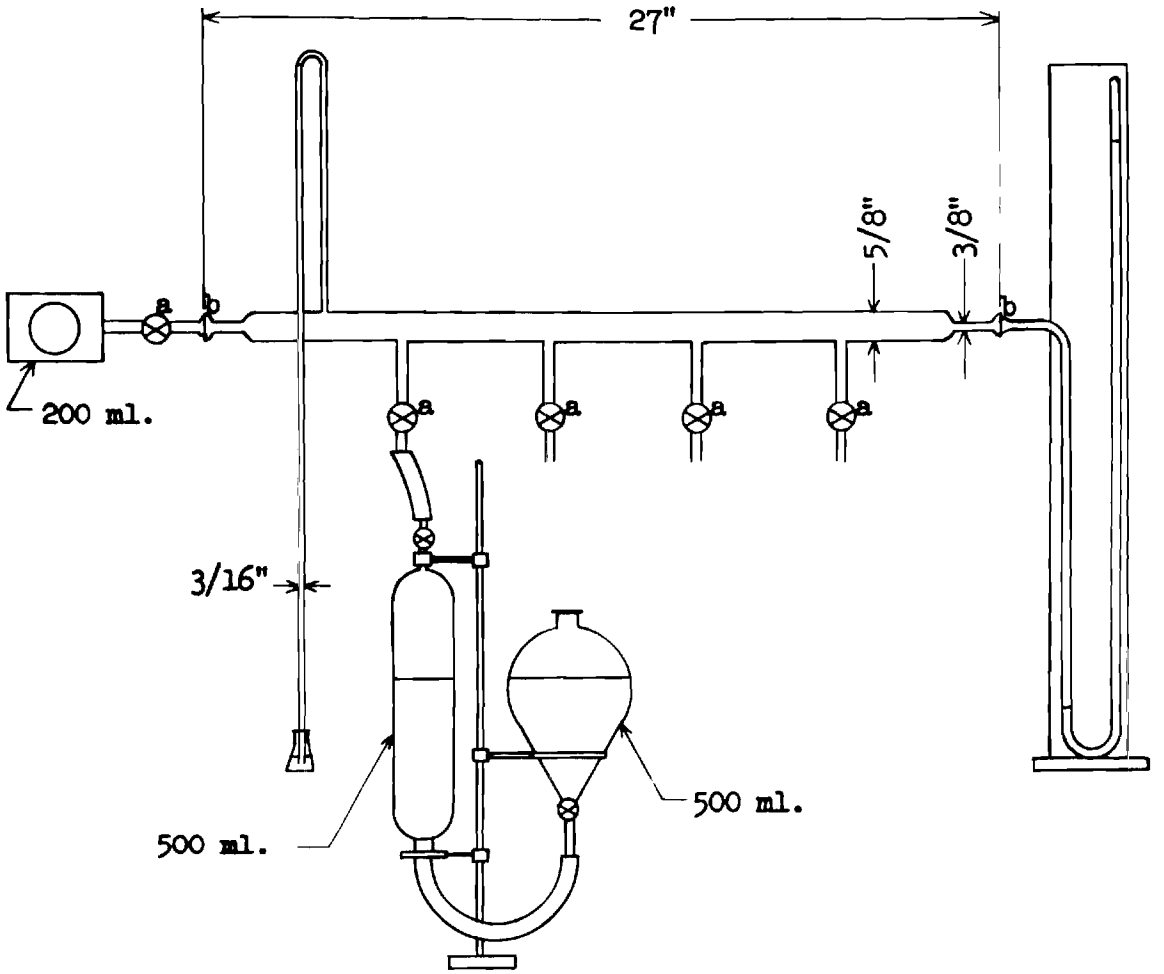

[a] 6 stopcock

[b] 18/7 ball and socket connection

Figure 3. Gas handling apparatus used in filling the gas cell for infra-red analysis.

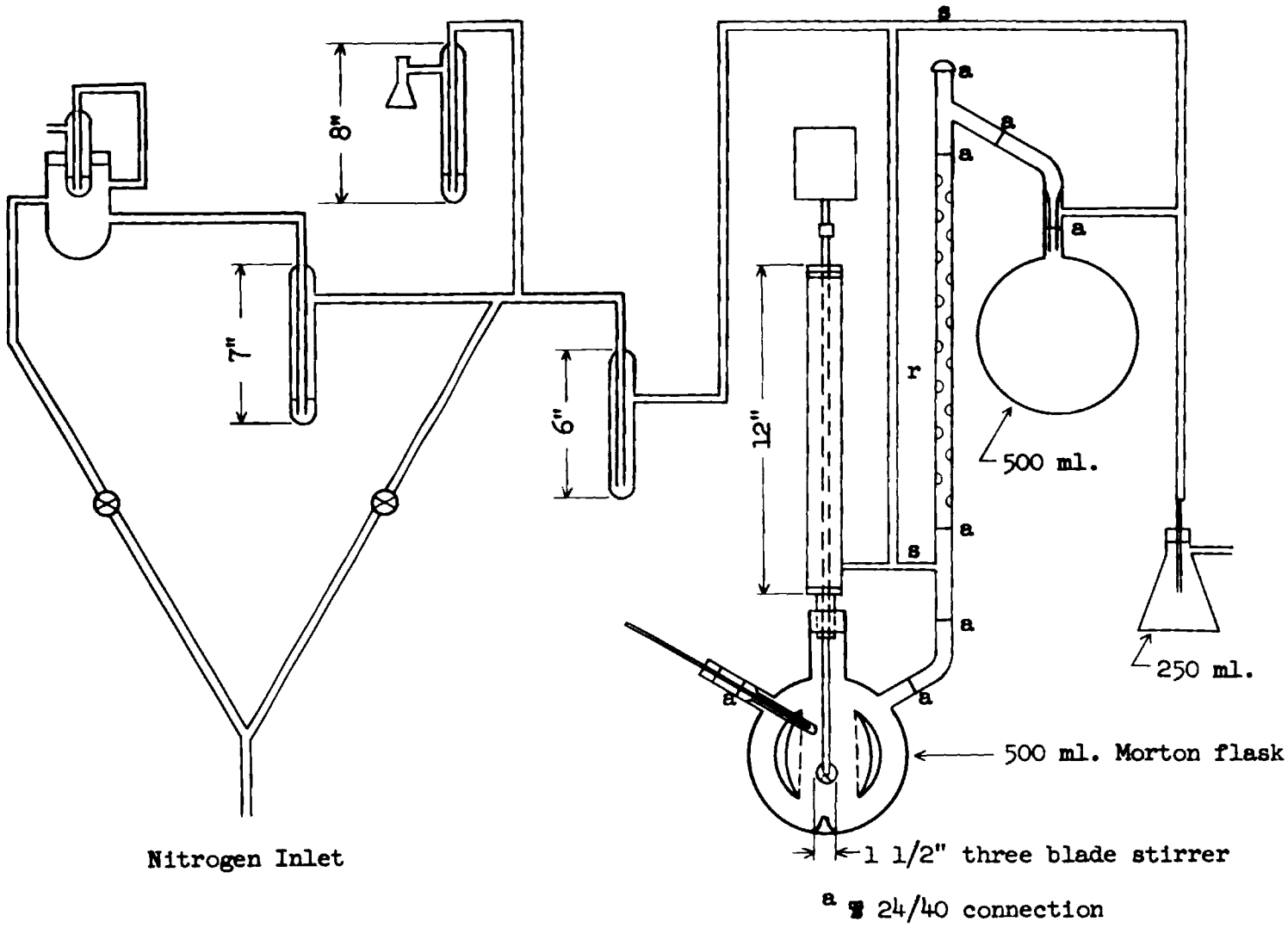

Figure 4. Schematic diagram of the mercury valves and the reaction flask for the reaction of the quaternary ammonium salts with sodium.

sulfuric solution. The sample was then stored in the NaOH bubbler and about 50 ml. of oxygen added. The oxygen was then transferred to the combustion chamber and the sample put back in the burrette. The combustion filament was then heated and the sample allowed to slowly enter the combustion chamber. Then the mixture was passed over the hot filament until a constant value was read on the gas burette. Next the gases were bubbled through a 50 per cent NaOH solution until constant volume was attained. The ml. of methane was taken as the ml. of CO_2 produced. See Appendix A for a typical determination and calculation for butane.

In the remaining cases the gas was taken from the collection bottle by the same method, but after the unsaturates were removed the gas was dried over concentrated sulfuric acid and then collected over mercury in an inverted 500 ml. separatory funnel. About 400 ml. of gas was prepared in this way and then the tube from the separatory funnel connected to one of the stopcocks on the gas handling apparatus. The apparatus and cell were evacuated and swept two or three times with N_2. The sample was then fed in and the pressure read on the manometer. The cell was sealed and the optical density at the desired bands determined. The entire infra-red spectra from 1 to 14 microns was run on each sample to qualitatively identify the methane and butane and confirm the removal of all the

unsaturates. The qualitative spectra of the gas with unsaturates was also run to identify the unsaturate as butene.

Calibration curves were prepared from the optical density measurements made on known samples of methane and butane at various partial pressures. The techniques of preparing the samples and determining the optical density are as follows. To one stopcock of the gas handling apparatus was connected a line from the vacuum pump which was in turn connected to a McLeod gauge. To a second stopcock was connected a tube from a nitrogen tank. To a third stopcock was connected a line from a methane or butane cylinder as the case may be. The valve on the methane or butane cylinder was opened and the lines swept with the gas. The stopcock was then closed and the valve turned off on the cylinder. The tubes were heavy-wall pressure tubing. The cell stopcock was then opened and the system evacuated to about 0.01 mm., swept with nitrogen, evacuated, and again swept with nitrogen and finally evacuated again. The stopcock leading to the pump was then turned off and the valve on the gas cylinder opened. The gas was fed in to the desired pressure by means of the stopcock. When the desired pressure had been attained the stopcock leading to the gas cylinder was closed and the valve on the gas cylinder turned off. The pressure of the gas was then read on the manometer and then the stopcock on the cell closed. The system was then evacuated and swept with

nitrogen as above. The pump stopcock was closed after the final evacuation and nitrogen fed in until it bubbled vigorously through the nitrogen bubbler. The stopcock on the cell was opened to allow the pressure in the cell to come up to that of the system. The nitrogen stopcock was closed and then the cell stopcock closed. The total pressure was read on the manometer and then the cell removed and taken to the infra-red spectrophotometer.[a]

The method used to determine the optical density at the desired wavelengths was one of a "cell in-cell out" method. The machine was zeroed and set at 100% transmission with the cell out at the desired wavelength. The cell was then placed in the path of the reference beam and the spectra was then swept from about 0.01 micron before to the same value after the maximum, thus being sure to get the highest point of the maximum. This procedure was carried out at the two selected maxima for butane (3.37 and 6.81 microns) and the one selected maximum for methane (7.67 microns). The cell was then evacuated and swept with nitrogen several times and finally filled with nitrogen. The cell constants at the various maxima were then determined as above. The recording paper used was such that the optical density could be read directly.

---

[a]The infra-red spectrophotometer used was a Perkin-Elmer, Model 21, Recording Infra-red Spectrophotometer, double beam with rock salt prisms. The gas cell used was a 10 cm. open path gas cell with rock salt windows.

In preparing low pressure samples of butane for calibration at its strongest band a slightly different technique was used. A moderate pressure of butane (ca. 60 mm.) was fed into the system such that an error in the manometer reading would cause a smaller per cent error. The stopcock on the gas cell was then closed and the remainder of the system evacuated and then the nitrogen stopcock opened. The cell stopcock was then opened and the pressure in the cell allowed to come up to about atmospheric pressure. The nitrogen stopcock was closed, then the cell stopcock was closed, and finally the pressure was recorded. The system, except the cell, was then evacuated and the pump stopcock closed. The cell stopcock was opened and the pressure allowed to equilibrate in the system. The diluted sample was then pumped out (by slightly opening the pump stopcock) until the pressure in the system was such as to give the desired partial pressure of butane. This pressure in the system was recorded and the cell stopcock closed. The remainder of the system was evacuated and swept with nitrogen. While the nitrogen bubbled through the bubbler the cell stopcock was opened and the pressure allowed to come up to atmospheric pressure (ca. 740 mm.) and the nitrogen stopcock closed. The cell stopcock was closed and the total pressure read on the manometer and recorded. Subsequent small dilutions were made by evacuating the system, except the cell

containing the above prepared sample, and then closing the pump stopcock. The cell stopcock was opened and the pressure allowed to equilibrate and read on the manometer. The cell stopcock was closed and the remainder of the system evacuated. The nitrogen stopcock was opened and then the cell stopcock opened. When the total pressure in the cell reached atmospheric pressure its stopcock was closed and the total pressure read on the manometer. From the measured pressures the partial pressure in the diluted sample was calculated. This method was continued until sufficient data had been determined for the calibration curve. The results of the calibrations are shown in Figures 5 through 9. At the butane maxima of 6.81 microns methane showed no absorption within the error in reading the values for the optical density from the paper. Using this value for butane, the methane partial pressure could be determined from the absorption maximum at 7.67 microns by using an appropriate correction for butane at this maximum. Using this value for methane the butane could be checked at its second maximum making an appropriate correction for methane. The two values of butane usually checked exactly, with a maximum discrepancy of 0.15 mm. The calibration curves were checked using known mixtures of methane and butane (11 mm. butane, 24 mm. methane). It was observed that high partial pressures of butane (37 mm.)

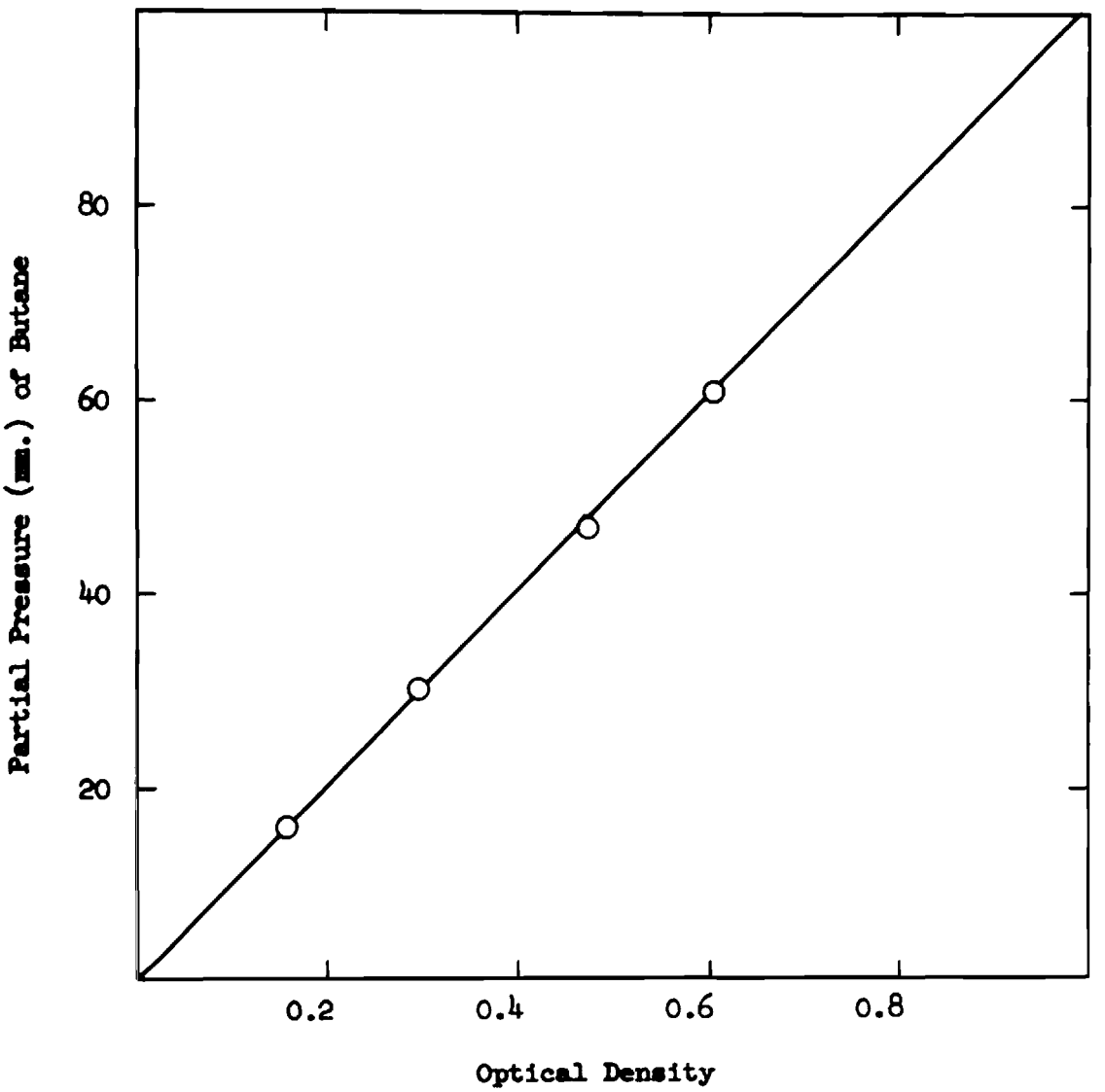

Figure 5. Optical density versus partial pressure (mm.) of butane at 6.81 microns.

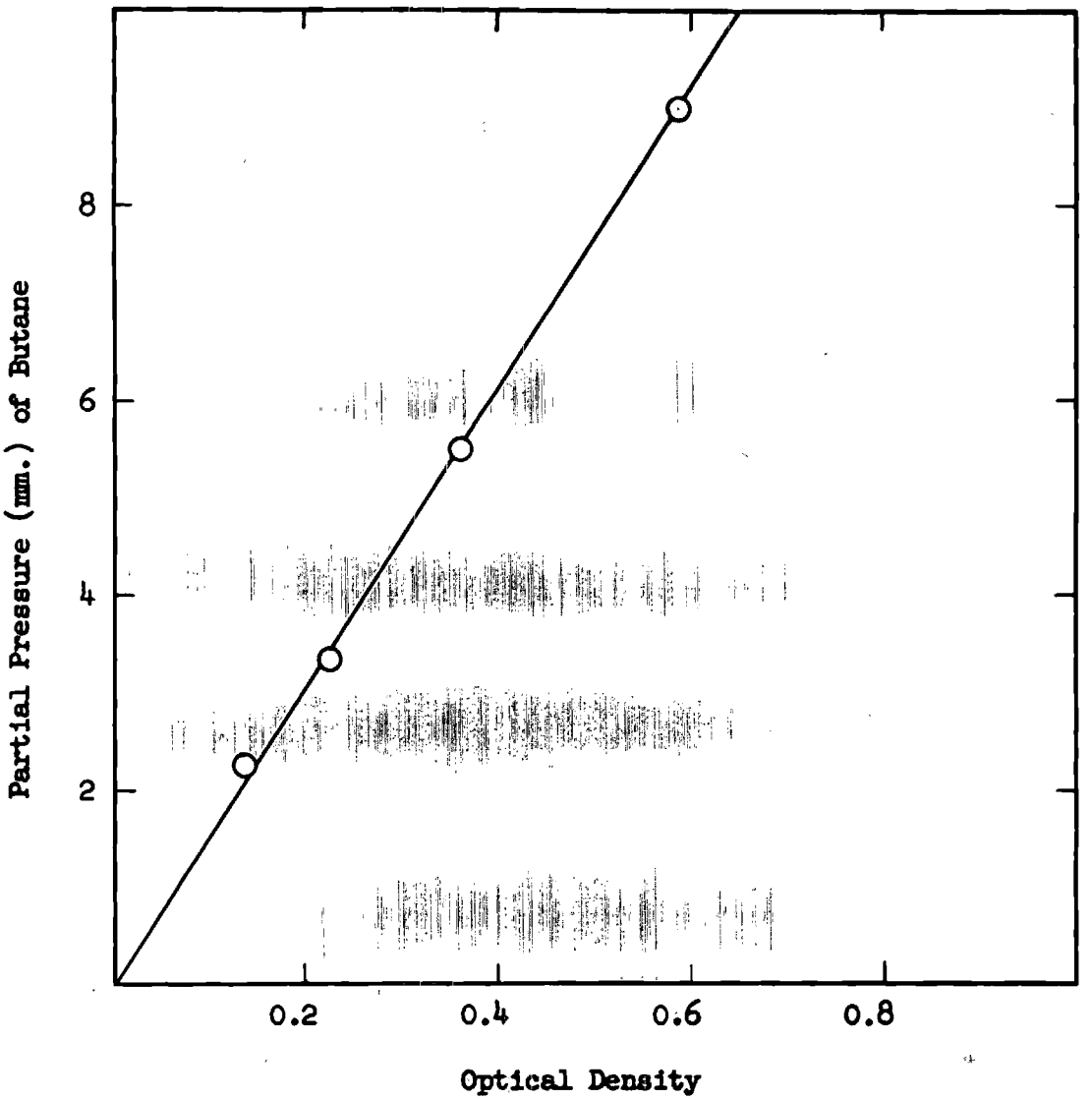

Figure 6. Optical density versus partial pressure (mm.) of butane at 3.37 microns.

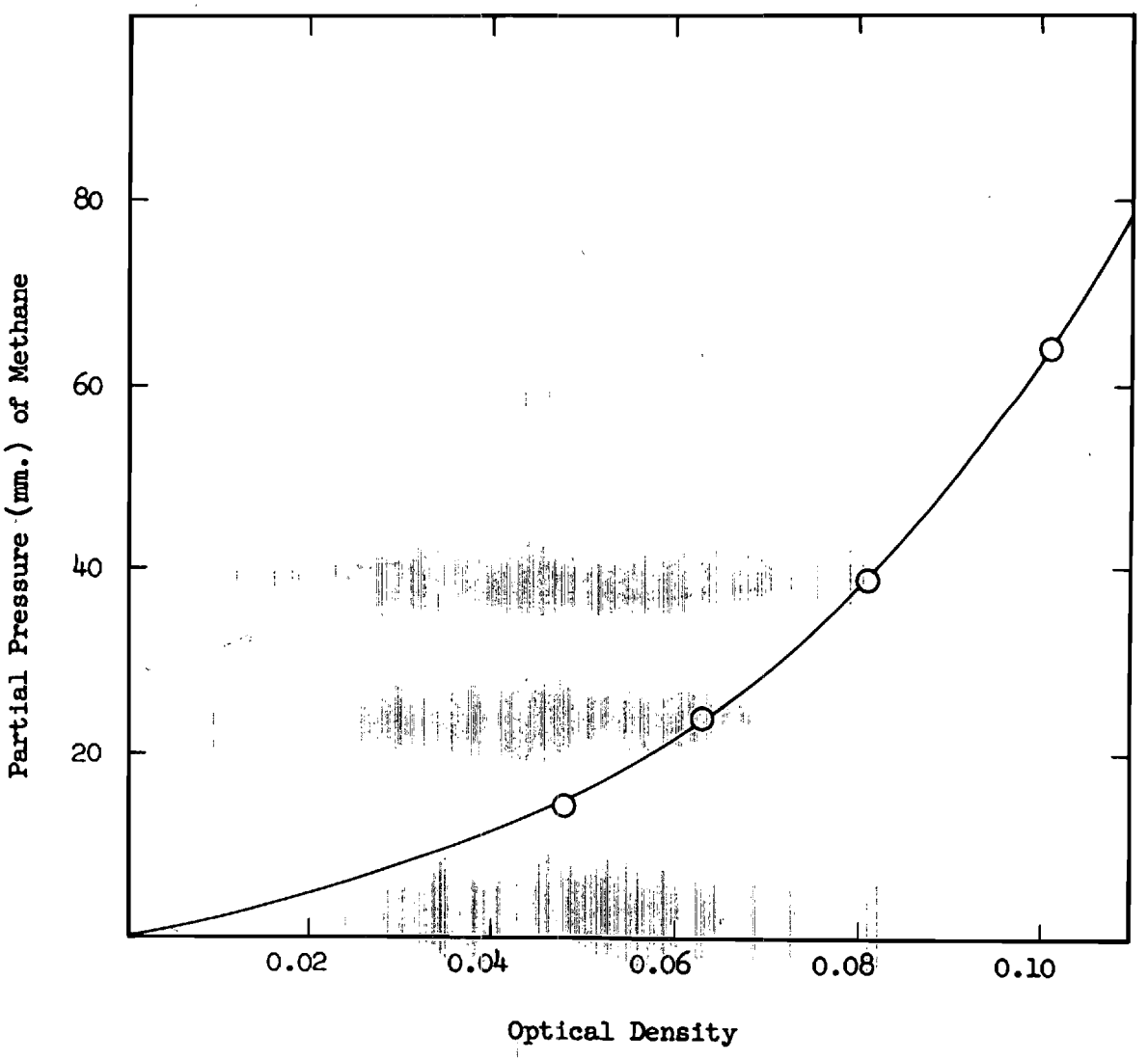

Figure 7. Optical density versus partial pressure (mm.) of methane at 3.37 microns.

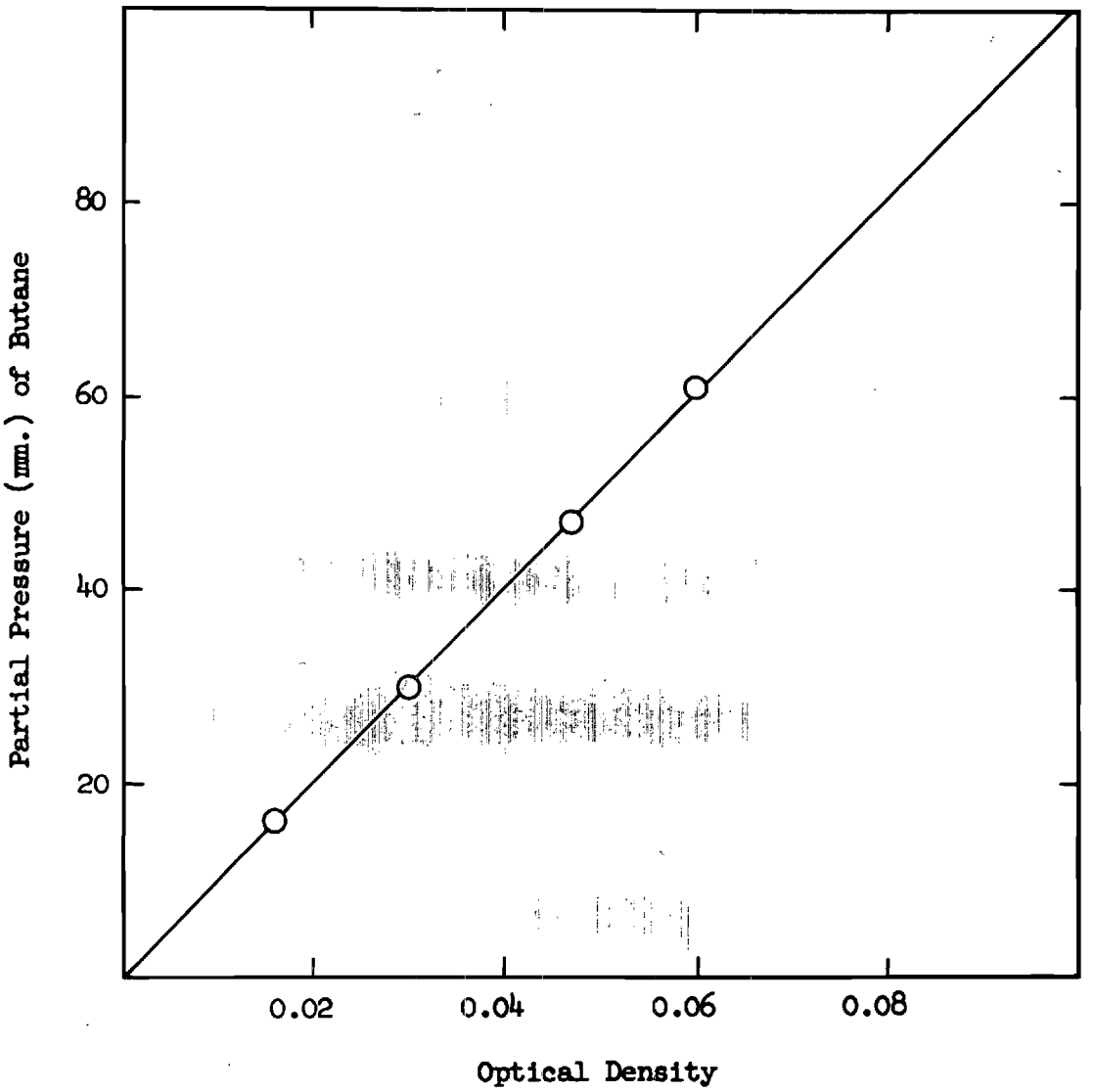

Figure 8. Optical density versus partial pressure (mm.) of butane at 7.67 microns.

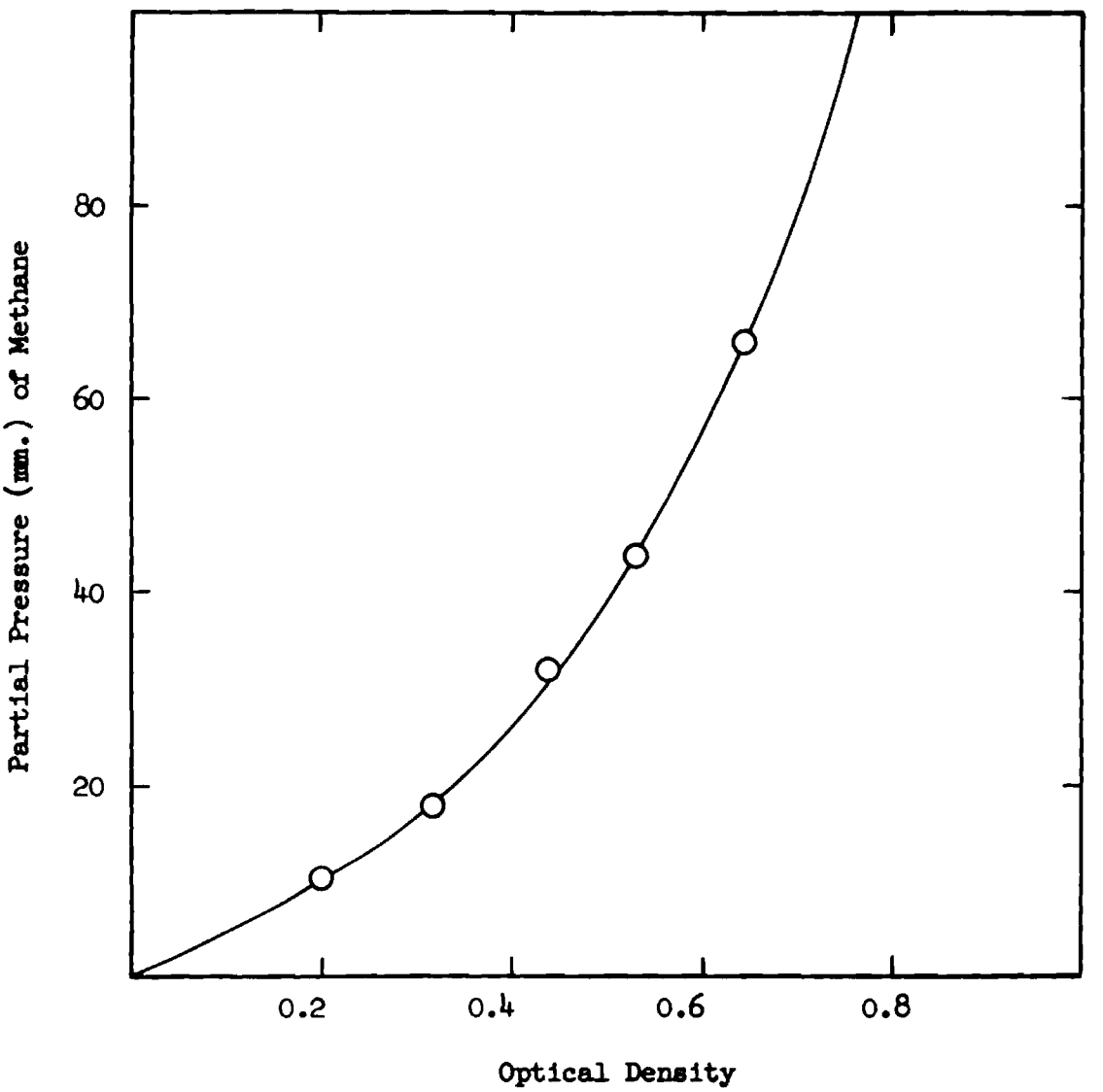

Figure 9. Optical density versus partial pressure (mm.) of methane at 7.67 microns.

affected the optical density measurement of methane at 7.67 microns, but no partial pressures of butane this high, or nearly this high were encountered.

Reaction of Tetramethylammonium Chloride with Sodium in Dioxane-*t*-Amyl Alcohol

Materials[a].--0.1040 mole tetramethylammonium chloride
0.5 mole sodium
110 ml. dioxane
140 ml. *t*-amyl alcohol

Apparatus.--As described in apparatus section under Apparatus I.

Procedure[b].--The system was swept with nitrogen and while the nitrogen passed through the system the solvent, salt, and sodium were added. The thermometer well was then put in place and the heat turned on. The flow of nitrogen through the system was then stopped and the gas line connected to the collection bottle. When the solvent reached the reflux temperature, the stirrer was started. Near the end of the reaction the heat was turned up to distill the solvent (100 ml. distilled)(solvent distilled in Run 4 only). When the evolution of gases had ceased the stirrer was

---

[a]Materials as used in Run 4.

[b]See also Tables 3 and 4.

Table 3. Typical Reaction Rate for $(CH_3)_4N\ Cl$ Plus 0.5 Mole of Na in Dioxane-t-Amyl Alcohol from Run No. 4

Time hr.	Time min.	Volume of gas (ml.)	Remarks
	0	0	The system was swept with N_2 and then solvent, sodium, and salt added in that order. The heat was turned on and the system sealed.
	10	0	The collection bottle was connected to the system.
	25	1250	The stirrer is running and the solution has a milky appearance with no sodium particles visible. T is 100°.
	30	2900	T is 99°.
	35	3700	T is 99°. The solution has a pink color.
	40	4200	T is 101°.
	45	4600	T is 102°.
	50	4800	T is 103°.
	55	5150	T is 103.5°.
1	0	5400	T is 104°.
1	10	5600	T is 104.5°.
1	15	5700	T is 105°.
1	20	5750	T is 105°.
1	25	5750	T is 105.5°. The heat was turned up in order to distill part of the solvent.
1	52	5950	T is 110°. The stirring and heating were stopped and N_2 passed into the system.
2	4	9000	The flow of N_2 into the system was stopped and the collection bottle sealed.

Table 4. Gaseous Reaction Products of $(CH_3)_4N\ Cl$

Plus 0.5 Mole of Na in Dioxane-t-Amyl Alcohol

Run No.	Moles salt	Time of reaction(a)	Volume of N_2 added	Per cent methane	Per cent amine
1	0.1000	3 hr. 29 min.	4950 ml.	(b)	45.2(c)(d)
2	0.1001	55 min.	2000 ml.	60.2	65.4(e)
3	0.1080	45 min.	4000 ml.	74.4	74.0(f)
4	0.1040	1 hr. 27 min.	3050 ml.	72.7	80.2(f)(g)

(a) The initial time was taken as that time when the stirring was started. The final time was taken as that time when the evolution of gases ceased.

(b) Air leaked into the collection bottle and therefore the gas analysis was not run.

(c) Visually the sodium did not seem to be broken up into small particles.

(d) The solvent consisted of 200 ml. of dioxane and 50 ml. of t-amyl alcohol.

(e) The solvent used was pure t-amyl alcohol.

(f) The solvent used was a unimolecular mixture of t-amyl alcohol and dioxane.

(g) An additional HCl trap was used utilizing a fritted glass bubbler.

stopped and the system swept with nitrogen. The heat was then turned off and the collection bottle sealed.

The analysis of the products was as follows. The amine traps were disconnected and aliquots from each trap titrated with NaOH solution to determine the amount of amine. The amount of amines found in the traps and in the distilled solvent from Run 4 is given below.

Trap 1. . . . . 0.0507 moles of amine

Trap 2. . . . . 0.0105 moles of amine

Trap 3. . . . . 0.0000 moles of amine

Solvent . . . . . 0.0211 moles of amine

To determine the amine in the distilled solvent the solvent was treated with a known volume of about 0.1 N HCl and then diluted with distilled water to 250 ml. in a volumetric flask. Then an aliquot was titrated with NaOH solution and the amount of amine determined. The amines were released from the HCl solution by concentrated KOH and then bubbled into a saturated ethanolic picric acid solution. The picrate was filtered and recrystallized from ethanol. The melting point found was 223-4°C. and a mixed melting point with known trimethylamine picrate was found to be 224-5°C. The amount of methane formed during the reaction was determined by combustion in an Orsat type gas analyzer.

Reaction of Trimethyl-*n*-butylammonium Chloride with Sodium in Dioxane-*t*-Amyl Alcohol

Materials[a].--0.0954 mole $(CH_3)_3N(n\text{-}C_4H_9)Cl$

0.5 mole of sodium

110 ml. dioxane

140 ml. *t*-amyl alcohol

Apparatus.--The apparatus used in these runs is the same as that described in the apparatus section as Apparatus II.

Procedure[b].--The system was swept with nitrogen and while the nitrogen passed through the system the solvent, salt, and sodium were added. The thermometer well was put in place and the heat turned on. The flow of nitrogen through the system was then stopped and the gas line connected to the collection bottle. When the solvent started to reflux the stirrer was started. When the evolution of gases ceased the heat was turned up to distill the solvent. Solvent was distilled until the temperature in the reaction flask reached 110°C. About one-half of the solvent was so distilled. The heat and stirrer were then turned off and the system swept with nitrogen.

The per cent methane and butane were determined using an infra-red spectrophotometer as described under

---

[a]Materials as used in Run 2.

[b]See also Tables 5 and 6.

Table 5. Typical Reaction Rate for $(CH_3)_3N(\underline{n}\text{-}C_4H_9)$ Cl Plus 0.5 Mole of Na in Dioxane-t-Amyl Alcohol from Run No. 2

Time hr.	Time min.	Volume of gas (ml.)	Remarks
	0	0	The system was swept with N_2 and then solvent, salt and sodium added in that order. The flask was then sealed and the heat turned on.
	10	0	The flow of N_2 into the system was stopped and the gas line connected to the collection bottle.
	20	--	The stirrer was started and turned up to full speed. The sodium particle size appears good, with no sodium particles visible.
	22	1300	--
	25	2000	--
	33	4000	--
	36	5000	--
	39	5500	--
	44	6000	--
	51	6500	--
1	0	6800	The heat was increased to distill the solvent.
1	6	7000	--
1	18	7200	--
1	20	7200	About 100 ml. of solvent has distilled. The stirrer was stopped and the flow of N_2 into the system was started.
1	26	9000	The flow of N_2 into the system was stopped and the heat turned off. The collection bottle was then sealed.

Table 6. Gaseous Reaction Products of $(CH_3)_3N(\underline{n}\text{-}C_4H_9)$ Cl

Plus 0.5 Mole of Na in Dioxane-t-Amyl Alcohol(a)

Run No.	Moles salt	Time of reaction(b)	Volume of N_2 added	Per cent methane	Per cent butane	Per cent butene	Per cent amines
1	0.0985	71 min.	2450 ml.	13.4	3.13	44.6	70.4
2	0.0954	60 min.	1800 ml.	12.5	3.57	50.8	65.3
3	0.0950	43 min.	2000 ml.	12.4	2.92	48.4	77.0
4	0.0502	72 min.	1200 ml.	27.1	10.4	52.6	88.0

(a) The solvent consisted of 1.00 mole of dioxane and 1.00 mole of t-amyl alcohol.

(b) The initial time was taken as that time when the stirring was started. The final time was taken as that time when the evolution of gases ceased.

the section on gas analysis. The per cent butene was determined using an Orsat type gas analyzer.

The amine captured in the HCl traps was trimethylamine while that which distilled with the solvent was largely n-butyldimethylamine. The distilled solvent was treated with a known amount of HCl solution and then diluted to 500 ml. in a volumetric flask. An aliquot was titrated with NaOH solution and the amount of amine determined. An aliquot from the HCl trap was also titrated and the amount of amine determined. The trimethylamine collected in the HCl traps was released with NaOH and bubbled into an ethanolic picric acid solution. The picrate was filtered and recrystallized from ethanol. The melting point was found to be 223-4°C. A mixed melting point was run with known trimethylamine picrate and found to be 224-5°C. The recorded value for the melting point is 225°.[21] The HCl-solvent mixture (the distilled solvent treated with HCl) was concentrated on the steam bath and the concentrate cooled. A combination was made of all of this corresponding amine from Runs 1, 2, 3, and 4. The concentrate was then treated with about 400 ml. of dry ether and then an excess of solid KOH. The flask was cooled during this operation in an ice-water bath. The ether layer was then decanted and the KOH layer extracted with two or three portions of dry ether and these added to the original ether layer. The

ether layer was dried over solid KOH and the ether distilled using a three-foot column packed with glass helices. The concentrated amine solution was then distilled on a small 18" x 3/16", tantalum spiral, jacket-heated column. During this step the flask dropped from the column and broke spilling the amine. A fifth run was made using 0.1040 mole of salt and a similar amine isolation carried out. The amine was distilled and 3.1 g. of material boiling between 91-93.4°C. collected. A picrate was prepared in the usual manner and its melting point found to be 96.2-97.6°C. A mixed melting point was run using known n-butyldimethylamine picrate and found to be 96.8-97.5°C. The known picrate melted at 96.6-97.6°C.

Reaction of Dimethyldi-n-Butylammonium Chloride with Sodium in Dioxane-t-Amyl Alcohol

Materials[a].--0.0622 mole of $(CH_3)_2N(n\text{-}C_4H_9)_2Cl$

0.5 mole sodium

110 ml. dioxane

140 ml. t-amyl alcohol

Apparatus.--The apparatus used for these reactions is that described as Apparatus II in the section on apparatus.

Procedure[b].--The apparatus was assembled as described in the

---

[a]Materials as used in Run 4.

[b]See also Tables 7 and 8.

Table 7. Typical Reaction Rate for $(CH_3)_2N(\underline{n}\text{-}C_4H_9)_2$ Cl Plus 0.5 Mole of Na in Dioxane-t-Amyl Alcohol from Run No. 4

Time hr.	Time min.	Volume of gas (ml.)	Remarks
	0	0	The salt was dissolved in part of the solvent and added to the flask and the remainder of the solvent and finally the sodium added. The heat was then turned on.
	5	0	The flow of N_2 into the system was stopped and the gas line connected to the collection bottle.
	11	--	The stirrer was started and turned up to full speed. The sodium particle size appears good with no sodium particles visible.
	14	3500	--
	19	5000	--
	22	6000	--
	26	7000	--
	35	7300	T is 104°.
	38	7300	The evolution of gases has ceased.
	39	7300	The stirrer and heat were turned off and the system was swept with N_2.
	43	9000	The flow of N_2 into the system was stopped and the collection bottle sealed.

Table 8. Gaseous Reaction Products of $(CH_3)_2N(\underline{n}\text{-}C_4H_9)_2$ Cl

Plus 0.5 Mole of Na in Dioxane-t-Amyl Alcohol(a)

Run No.	Moles salt	Time of reaction(b)	Volume of N_2 added	Per cent methane	Per cent butane	Per cent butene
1	0.0500	47 min.	1200 ml.	8.90	8.84	(100)(c)
2	0.0424	48 min.	1750 ml.	9.52	12.2	(91)(c)
3	0.0858	34 min.	1200 ml.	11.0	5.92	73.1(c)(d)
4	0.0623	28 min.	1700 ml.	13.9	8.66	74.5

(a) The solvent consisted of 1.00 mole of dioxane and 1.00 mole of t-amyl alcohol.

(b) The initial time was taken as that time when the stirring was started. The final time was taken as that time when the evolution of gases ceased.

(c) It is believed there was a leak in the Orsat equipment causing a higher per cent butene than was actually present.

(d) A correction was made for the leak in the Orsat apparatus for this run.

apparatus section and then swept with nitrogen. While the nitrogen passed through the system the salt, dissolved in the solvent, was added; the sodium was then added; and the system closed by inserting the thermometer well. The heat was turned on, the flow of nitrogen through the system stopped, and the gas line connected to the collection bottle. When the solvent reached the reflux temperature the stirrer was started and a vigorous reaction took place. When the evolution of gases ceased the stirring and heating were discontinued and the system swept with nitrogen.

The gases were analyzed for unsaturates using an Orsat type gas analyzer and for methane and butane using the infra-red spectrophotometer as described in the section on gas analysis.

The amines were isolated from the combined solvents from all the runs (1 through 4) accordingto the following scheme. The combined reaction mixtures were treated with enough water to dissolve the alkoxide and sodium chloride and then about 500 g. of solid KOH added. The solvent-amine layer was then separated and the KOH layer extracted three times with about 200 ml. portions of ether and these added to the amine-solvent phase. This phase was then dried over solid KOH, decanted, and treated with an excess of concentrated HCl. The solvent and water were distilled on the steam bath with aid of a water aspirator until the volume was reduced to about 100 ml. The solution was then

cooled in the refrigerator and treated with about 500 ml. of ether. Solid KOH was added slowly to this mixture and a vigorous reaction evolving heat took place. Some of the amine was lost in this operation because of the heat evolved during the vigorous reaction. The ether layer was decanted and the KOH layer extracted three times with about 100 ml. portions of ether and these added to the decanted ether. The ether was distilled using a three foot glass helices packed column. When the volume was reduced to about 75 ml. the material was transferred to a 100 ml. flask and about two grams of sodium added. The ether and amines were distilled at atmospheric pressure (740 mm.) using a small 18" x 3/16", tantalum spiral column. The yields of amines were as follows: forerun (b.p. 40-90.6^{o}) 1 g., dimethyl-n-butylamine (b.p. 90.6-94.0^{o}) 14.4 g., intermediate cut (b.p. 94.0-161.0^{o}) 1.0 g., and methyldi-n-butylamine (b.p. 161.0-162.5^{o}) 5.18 g. Picrates were prepared in the usual manner and the melting points determined as follows: dimethyl-n-butylamine picrate, 95.6-96.6^{o}, mixed melting point with known picrate, 96.6-7.6^{o}; methyldi-n-butylamine picrate, 85.6-6.6^{o}, mixed melting point with known picrate, 85.6-6.6^{o}. (For known picrate melting points see Table 2.)

Reaction of Methyltri-*n*-Butylammonium Iodide with Sodium in Dioxane-*t*-Amyl Alcohol

Materials[a].--0.1000 mole of $CH_3N(n\text{-}C_4H_9)_3I$

0.5 mole sodium

110 ml. dioxane

140 ml. *t*-amyl alcohol

Apparatus.--The apparatus used for these reactions is that described as Apparatus II in the section on apparatus.

Procedure[b].--The apparatus was assembled as described in the apparatus section and then swept with nitrogen. While the nitrogen passed through the system the salt, solvent, and sodium were added. The thermometer well was then put in place and the heat turned on. The flow of nitrogen through the system was stopped and the gas line attached to the collection bottle. When the solvent reached the reflux temperature the stirrer was started. After about one minute of stirring a vigorous reaction took place and the stirring was stopped. The reaction continued vigorously and pushed about half of the reaction mixture into the upper safety trap. A few bubbles of the gas were pushed out the mercury safety trap. When the reaction had subsided the stirring was again started and continued until the evolution of

---

[a]Materials as used in Run 2.

[b]See also Tables 9 and 10.

Table 9. Typical Reaction Rate for $CH_3N(\underline{n}\text{-}C_4H_9)_3$ I Plus 0.5 Mole of Na in Dioxane-t-Amyl Alcohol from Run No. 2

Time hr. min.	Volume of gas (ml.)	Remarks
0	0	The system was swept with N_2 and then solvent, salt, and sodium added in that order. The flask was sealed and the heat turned on.
10	0	The flow of N_2 into the system was stopped and the gas line connected to the collection bottle.
17	--	The stirrer was started and a vigorous reaction took place. The stirrer was stopped but the reaction continued.
20	1000	The reaction forced about one-half of the reaction mixture into the upper saftey flask. The reaction continued vigorously without stirring.
28	5800	T is 102°. The stirrer was again started.
31	5900	The evolution of gases ceased. The stirrer and heat were turned off and N_2 passed into the system.
36	8000	The flow of N_2 into the system was stopped and the collection bottle sealed.

Table 10. Gaseous Reaction Products of $CH_3N(\underline{n}\text{-}C_4H_9)_3$ I

Plus 0.5 Mole of Na in Dioxane-t-Amyl Alcohol(a)

Run No.	Moles salt	Time of reaction(b)	Volume of N_2 added	Per cent methane	Per cent butane	Per cent butene
1	0.0998	12 min.	2300 ml.	80.3	8.18	4.03
2	0.0580	14 min.	2100 ml.	84.8	11.2	5.47
3	0.0503	17 min.	2800 ml.	87.2	10.3	5.77

(a) The solvent consisted of 1.00 mole of dioxane and 1.00 mole of t-amyl alcohol.

(b) The initial time was taken as that time when the stirring was started. The final time was taken as that time when the evolution of gases ceased.

gases ceased. At this time the system was swept with nitrogen and the collection bottle sealed. It was interesting to note that the reaction continued in the upper safety trap in the absence of stirring and heating. Apparently the sodium particle size reached a critical value, at which the reaction was almost explosive. This same vigorous reaction was observed for all of the runs upon methyltri-n-butylammonium iodide.

The gases were analyzed for unsaturates using an Orsat gas analyzer and for methane and butane using the infra-red spectrophotometer as described in the section on gas analysis.

The amines were isolated from the combined reaction mixtures of Runs 1, 2, and 3 for $CH_3N(n\text{-}C_4H_9)_3I$ and Runs 1 and 2 for $CH_3N(n\text{-}C_4H_9)_3Br$ by the same scheme used in the isolation of amines from the $(CH_3)_2N(n\text{-}C_4H_9)_2Cl$ reaction mixtures. (See page 62) The yields of amines and foreruns are as follows: forerun (b.p. 100-161°), 5.83 g.; methyldi-n-butylamine (b.p. 161-162.5°), 5.44 g.; intermediate fraction (b.p. 162.5-212°), 1.93 g.; tri-n-butylamine (b.p. 212-213°), 43.68 g. The pressure was about 740 mm. for the distillation. Picrates were prepared in the usual manner and the melting points determined as follows: methyldi-n-butylamine picrate, 85.0-6.0°, mixed melting point with known picrate, 85.6-7.0°; tri-n-

butylamine picrate, 105.0-6.0°, mixed melting point with known picrate, 105.0-6.0°. The recorded value for tri-*n*-butylamine picrate melting point is 105-6°.[19]

Reaction of Methyltri-*n*-Butylammonium Bromide with Sodium in Dioxane-*t*-Amyl Alcohol

Materials[a].--0.0548 mole $CH_3N(n\text{-}C_4H_9)_3Br$

0.5 mole sodium

110 ml. dioxane

140 ml. *t*-amyl alcohol

Apparatus.--The apparatus used for these reactions is that described as Apparatus II in the section on apparatus.

Procedure[b].--The apparatus was assembled as described in the apparatus section and then swept with nitrogen. While the nitrogen passed through the system the salt, sodium, and solvent were added. The thermometer well was then put in place and the heat turned on. The flow of nitrogen through the system was then stopped and the gas line connected to the collection bottle. When the solvent reached the reflux temperature the stirring was started. After about one minute of stirring the reaction went vigorously and the stirring was stopped for a short period until the

---

[a]Materials as used in Run 1.

[b]See also Tables 11 and 12.

Table 11. Typical Reaction Rate for $CH_3N(\underline{n}\text{-}C_4H_9)_3$ Br Plus 0.5 Mole of Na in Dioxane-t-Amyl Alcohol from Run No. 1

Time hr. min.	Volume of gas (ml.)	Remarks
0	0	The system was swept with N_2 and then solvent, salt, and sodium added. The flask was sealed and the heat turned on.
3	0	The flow of N_2 into the system was stopped and the gas line connected to the collection bottle.
7	--	The stirrer was started and after running about one minute a vigorous reaction started in the flask and the stirring was stopped.
9	2300	The reaction subsided and the stirrer was again started. The solution has a pale blue color.
14	3500	--
17	4000	--
19	4500	--
21	5000	--
23	5500	--
26	6000	--
31	6500	--
40	7000	--
46	7000	The evolution of gases ceased. The stirrer and heat were turned off and N_2 passed into the system.
50	9000	The flow of N_2 into the system was stopped and the collection bottle sealed.

Table 12. Gaseous Reaction Products of $CH_3N(\underline{n}\text{-}C_4H_9)_3$ Br

Plus 0.5 Mole of Na in Dioxane-t-Amyl Alcohol(a)

Run No.	Moles salt	Time of reaction(b)	Volume of N_2 added	Per cent methane	Per cent butane	Per cent butene
1	0.0548	37 min.	2000 ml.	70.0	14.3	(29.7)(c)
2	0.1000	41 min.	2800 ml.	54.5	6.82	16.9

(a) The solvent consisted of 1.00 mole of dioxane and 1.00 mole of t-amyl alcohol.

(b) The initial time was taken as that time when the stirring was started. The final time was taken as that time when the evolution of gases ceased.

(c) It is believed there was a leak in the Orsat apparatus causing a higher per cent butene than was actually present.

reaction subsided. In Run 2 the reaction mixture was pushed in part into the upper safety trap even though the stirring was stopped. When the reaction subsided the stirring was again started and continued until the evolution of gases ceased. Again, as in the case of the reaction of $CH_3N(\underline{n}\text{-}C_4H_9)_3I$, the reaction continued in the safety flask in the absence of heating or stirring. When the evolution of gases ceased the system was swept with nitrogen and the collection bottle sealed.

The gases were analyzed for unsaturates using an Orsat type gas analyzer and for methane and butane using the infra-red spectrophotometer as described in the section on gas analysis.

The amines were isolated from the reaction mixtures along with the reaction mixtures from the reactions of $CH_3N(\underline{n}\text{-}C_4H_9)_3I$ as described under Reaction of Methyltri-*n*-Butylammonium Iodide.

Reaction of Tetra-*n*-Butylammonium Bromide with Sodium in Dioxane-*t*-Amyl Alcohol

Materials[a].--0.0500 mole $(\underline{n}\text{-}C_4H_9)_4NBr$

0.5 mole sodium

102 ml. dioxane

128 ml. *t*-amyl alcohol

---

[a]Materials as used in Run 4.

Apparatus.--The apparatus used is that described in the section on apparatus as Apparatus II.

Procedure[b].--The system was swept with nitrogen, and then solvent, salt, and sodium added. (In Run 4 the salt was dissolved in 40 ml. of the solvent and added to the reaction mixture by means of a graduated dropping funnel.) The heat was turned on and then the flow of nitrogen in the system stopped. The gas line was then connected to the collection bottle. When the solvent started to reflux the stirrer was started and a vigorous reaction took place. It was necessary to stop the stirring on several occasions during the reaction in order to prevent the reaction mixture from going into the upper safety trap. When the evolution of gases ceased the stirring and heating were stopped and the system swept with nitrogen.

The tri-*n*-butylamine was isolated from the reaction mixture in Run 1. This was accomplished by dissolving the alkoxide and sodium bromide in a minimum amount of water and then the amine-alcohol-dioxane layer separated. The water layer was extracted with two or three portions of dry ether and added to the amine phase. The ether and most of the solvent were distilled using a three-foot column packed with glass helices. The concentrated solution was then fractionated using a small 18" x 3/16", tantalum

---

[b]See also Tables 13 and 14.

Table 13. Typical Reaction Rate for $(\underline{n}\text{-}C_4H_9)_4N$ Br Plus 0.5 Mole of Na in Dioxane-$\underline{t}$-Amyl Alcohol from Run No. 4

Time hr.	Time min.	Volume of gas (ml.)	Remarks
	0	0	The system was swept with N_2 and then the solvent and sodium were added. The heat was turned on.
	7	0	The flow of N_2 into the system was stopped and the gas line connected to the collection bottle.
	14	--	The solvent is refluxing. The stirrer was started and the sodium reacted vigorously with the alcohol. The sodium particle size is good with no sodium particles visible.
	15	500	The addition of compound was started followed by a very vigorous reaction. Due to the high level of the solvent in the condensor the salt can be added only slowly.
	32	--	The addition of compound was complete.
	36	4200	--
	56	5000	--
1	56	5550	The stirrer and heat were stopped and N_2 was passed into the system.
2	10	8000	The flow of N_2 into the system was stopped and the collection bottle sealed.

Table 14. Gaseous Reaction Products of $(n\text{-}C_4H_9)_4N\ Br$

Plus 0.5 Mole of Na in Dioxane-t-Amyl Alcohol

Run No.	Moles salt	Time of reaction(b)	Volume of N_2 added	Per cent butane	Per cent butene	Per cent reaction
1	0.0894	52 min.	3400 ml.	28.8	21.4	50.2(b)
2	0.0922	75 min.	2000 ml.	51.0	48.8	99.8(b)
3	0.1003	97 min.	2050 ml.	48.7	51.0	99.7(b)
4	0.0500	102 min.	2450 ml.	60.9	16.1	77.0(c)

(a) The initial time was taken as that time when the stirring was started. The final time was taken as that time when the evolution of gases ceased.

(b) The solvent used consisted of dioxane and t-amyl alcohol in the proportion of 1.66 to 1 mole respectively.

(c) The solvent used consisted of dioxane and t-amyl alcohol in the proportion of 1 to 1 molar. The salt was dissolved in 40 ml. of this solvent and added dropwise from a dropping funnel.

spiral, jacket-heated column. Tributylamine was recovered in 96.5% yield based on the amount of butane and butene formed. A picrate was prepared of the tri-n-butylamine and its melting point found to be 106.6-7.6°C. A mixed melting point was run with known tri-n-butylamine picrate (m.p. 106.6-7.6°C.) and the above picrate; the mixture was found to melt between 106.6-7.6°C.

The butane and butene were analyzed on the Orsat type gas analyzer. For a typical analysis see Appendix A. For the mixture from Run 4 the Orsat value was checked with the infra-red method and the values were found to check within 0.01%.

A portion of the butene from Runs 1, 2, and 3 was bubbled through a bromine water solution and the dibromide isolated and distilled. The product was found to boil between 164.0-.4°C. at 738 mm., 6.33 g. being isolated. 1,2-Dibromobutane is reported to boil at 166°C.[23]

Reaction of Tetra-n-Butylammonium Bromide with Sodium-t-Amyl Alkoxide in Dioxane-t-Amyl Alcohol

Materials.--0.0875 mole $(n\text{-}C_4H_9)_4NBr$

110 ml. dioxane

140 ml. t-amyl alcohol

---

[23] I. M. Heilbron, Dictionary of Organic Compounds, Oxford University Press, New York, N.Y., 1943, Vol. I, p. 683.

Apparatus.--The apparatus used for this reaction is that described as Apparatus III in the section on apparatus.

Procedure[a].--The apparatus was assembled as described above and the system swept with nitrogen. The solvent and sodium were then added and the flask stoppered. The heat was turned on and the flow of nitrogen through the system discontinued. The gas line was connected to the collection bottle. When the solvent reached the reflux temperature the stirrer was started and the reaction of the sodium with the alcohol continued until the evolution of gases ceased. The stirring and heat were then stopped and the system swept with nitrogen. While the nitrogen passed through the system the rubber tube connecting the bottle of ammonium salt was connected to one side arm of the flask. The gas line was then changed to a second collection bottle and the flow of nitrogen through the system stopped. The stirring and heating were again started and the salt fed in in small increments, the stirring and heating being continued until the evolution of gases ceased. The system was then swept with nitrogen and the collection bottle sealed.

The amount of unsaturate formed from the reaction was determined using an Orsat type gas analyzer. The yield of olefin was 75.7% based on the weight of salt used. The gases were passed through a bromine water solution and the

---

[a]See also Table 15.

Table 15. Reaction Rate for $(n\text{-}C_4H_9)_4N$ Br Plus Sodium-t-Amyl Alkoxide[a] in Dioxane-t-Amyl Alcohol

Time hr.	Time min.	Volume of gas (ml.)	Remarks
	0	0	While N_2 passed through the system, the rubber tube connected to the ammonium salt flask was attached to one side arm of the reaction flask. The flow of N_2 through the system was stopped and the gas line connected to the collection bottle. The heat was turned on and the stirrer started.
	15	0	About 3-4 grams of salt was added and seemed to react immediately as evidenced by the evolution of gas.
	20	200	More salt was added.
	27	400	" " " "
	33	650	" " " "
	40	750	" " " "
	48	950	" " " "
	55	1200	" " " "
1	0	1300	" " " "
1	3	1500	The remainder of the salt was added and the solvent allowed to distill into the salt flask thus washing the adhering salt into the reaction mixture.
1	18	1800	--
1	25	1950	The evolution of gases ceased. N_2 was passed into the system and the stirring and heating were stopped.
1	43	5000	The flow of N_2 through the system was stopped and the collection bottle sealed.

[a]The sodium-t-amyl alkoxide was that formed from the reaction of 0.5 mole of sodium with the t-amyl alcohol in the solvent.

brominated compound isolated and distilled. The material was collected boiling at 164°C. at atmospheric pressure (about 740 mm.), the yield being 3.65 g. The recorded boiling point for 1,2-dibromobutane is 166°C.[23]

Test for the Decomposition of Methyltri-n-Butylammonium Iodide in Boiling Dioxane-t-Amyl Alcohol

Materials.--0.0809 mole $CH_3N(n\text{-}C_4H_9)_3I$

110 ml. dioxane

140 ml. t-amyl alcohol

Apparatus.--The apparatus used in the distillation was the same as described in the apparatus section as Apparatus III with the following modifications. The upper safety flask was replaced with a water cooled condenser. To this was connected a connector tube with a take off, the connector tube joining the condenser to the receiver. A rubber tube was run from the take off tube on the connector to a fritted glass bubbler containing an ethanolic $AgNO_3$ solution.

Procedure[a].--The system was assembled as described above and then swept with nitrogen. The solvent and salt were added and the thermometer well put in place. The flow of nitrogen was stopped and the heat turned on. A slow distillation was carried out distilling about 100 ml. of solvent over a period of about one hour. The system was then

---

[a]See also Table 16.

Table 16. Distillation Rate for the Test for the Decomposition of $CH_3N(\underline{n}\text{-}C_4H_9)_3$ I in Boiling Dioxane-t-Amyl Alcohol

Time hr.	Time min.	Remarks
	0	The system was swept with nitrogen, and then the solvent and salt were added. The flow of nitrogen into the system was stopped and the heat turned on.
	20	T is 100° in the flask. The stirrer was started and run at normal reaction speed.
	31	The solvent vapors are at the top of the column.
	36	T is 101° in the flask. The first drop of solvent distilled.
1	41	T is 101° in the flask. About 100 ml. of solvent has distilled. The heat and stirrer were turned off and the system swept with nitrogen for about five minutes.

swept with nitrogen and the heat turned off. The stirrer was run at the normal speed for the reaction of ammonium salts with sodium during the distillation. The distilled solvent was added to the 170 ml. of ethanolic silver nitrate (0.02 mole of silver nitrate dissolved in 170 ml. of 95% ethanol) and no precipitate formed after several minutes shaking. A five ml. portion of the solution was treated with one drop of methyl iodide and a yellow precipitate formed after about one minute. Ten ml. of the solution was mixed with 50 ml. of distilled water and allowed to stand overnight, but no precipitate formed.

PART II

THE REACTION OF CHLOROMETHYLTRIMETHYLAMMONIUM CHLORIDE WITH SODIUM

CHAPTER I

REACTION OF CHLOROMETHYLTRIMETHYLAMMONIUM CHLORIDE WITH SODIUM

It has been shown by T. S. Stevens[24] and other workers[25-29] that certain quaternary ammonium and sulfonium ions rearrange to tertiary amines and sulfides respectively when treated with bases. The rearrangement takes place through an intramolecular displacement which is believed to go through an intermediate dipolar ion or zwitterion. Thus Stevens[24] found that phenacylbenzyldimethylammonium hydroxide in water rearranges to give omega-dimethylamino-omega-benzylacetophenone.

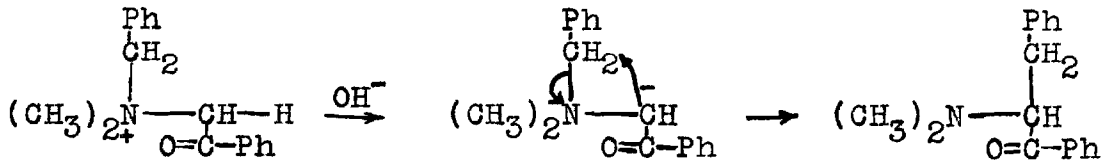

---

[24] T. S. Stevens, et.al. J. Chem. Soc., 1928, 3193; 1930, 2107, 2119; 1932, 55, 69, 1926, 1932; 1934, 279.

[25] G. Wittig, et.al., Ann., 555, 133 (1944); 560, 116 (1948).

[26] A. Campbell, A. H. J. Houston, and J. Kenyon, J. Chem. Soc., 1947, 93.

[27] M. Sommelet, Compt. rend., 205, 56 (1937).

[28] L. H. Bock, R. L. Smith, and R. W. Auten, Abstracts of the 116th Meeting, American Chemical Society, Atlantic City, N. J., September 1949, p. 70M.

[29] E. D. Hughes and C. K. Ingold, J. Chem. Soc., 1933, 69.

Similarly the corresponding sulfonium compound rearranges to the sulfide.

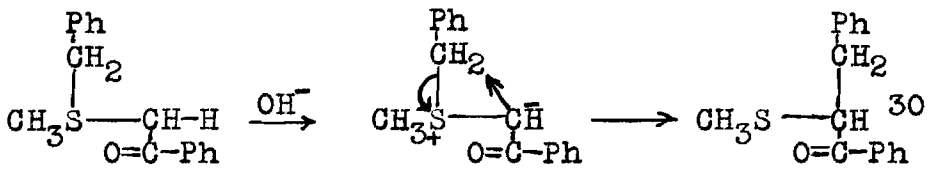

A similar rearrangement was observed by Wittig[31] and others[32] when ethers were treated with phenyl-lithium (see also Ref. 33 for further details).

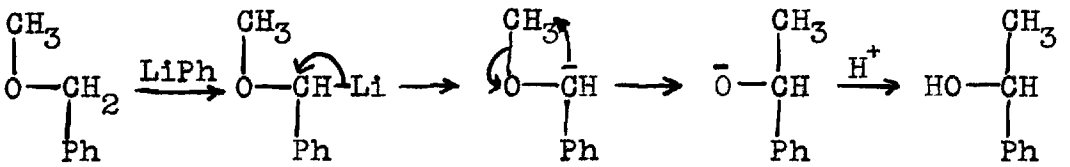

Wittig[34] also proposed the formation of the dipolar ion

$$^{-}CH_2\overset{+}{N}(CH_3)_3$$

---

[30] T. Thompson and T. S. Stevens, J. Chem. Soc., 1932, 69.

[31] G. Wittig, et.al., Ann., (1942), 550, 260; (1947), 557, 205.

[32] C. R. Hauser and S. W. Kantor, J. Am. Chem. Soc., 73, 1437 (1951).

[33] For further examples and discussion of the Stevens and Wittig rearrangements see C. K. Ingold, Structure and Mechanism in Organic Chemistry, Cornell Univ. Press, 1953, pp. 524-8.

[34] G. Wittig and M. Rieber, Ann., 562, 177 (1949).

from the reaction of $(CH_3)_4NBr$ with phenyl-lithium. He did not report any rearrangement products from this reaction, however, his reaction conditions were rather mild.

In the reaction of $ClCH_2N(CH_3)_3Cl$ with sodium the same dipolar ion

$$\bar{:}CH_2\overset{+}{N}(CH_3)_3$$

as proposed by Wittig was expected.

$$\text{(I)} \qquad ClCH_2N(CH_3)_3Cl + 2\ Na\cdot \longrightarrow \bar{:}CH_2\overset{+}{N}(CH_3)_3 + 2\ NaCl$$

If a rearrangement similar to a Stevens rearrangement occurs, the expected product would be ethyldimethylamine.

$$\text{(II)} \qquad \bar{:}CH_2\overset{+}{N}(CH_3)_2 \longrightarrow N(CH_3)_2 - CH_2CH_3$$

The volatile amines from the reaction were collected in HCl traps and the solvent in the flask distilled in part or in whole to obtain the remaining amines. A mixture of amines was obtained from which trimethylamine was identified by preparation of its picrate. Indirect evidence was also obtained for the presence of vinyldimethylamine and ethyldimethylamine. Thus when the mixture of amines was reacted with methyl iodide, followed by moist silver oxide and the resulting quaternary ammonium hydroxides pyrolyzed, ethylene and acetylene were identified and determined semi-quanti-

tatively from the infra-red spectra of the gaseous products. From this it appears that rearrangement occured in part, ethyldimethylamine being formed by the reaction shown in II above.

The vinyldimethylamine could have come about by one of at least two possible reactions.

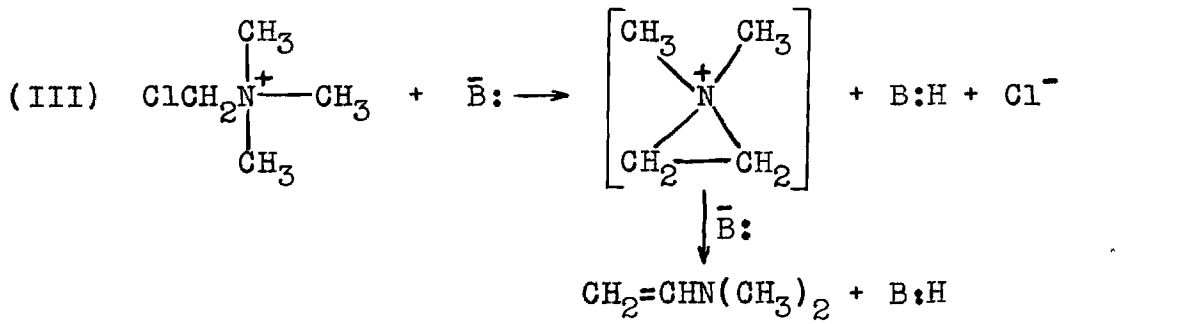

(IV) $(CH_3)_3\overset{+}{N}CH_2\overset{-}{:} + ClCH_2\overset{+}{N}(CH_3)_3 \rightarrow (CH_3)_3\overset{+}{N}CH_2CH_2\overset{+}{N}(CH_3)_3 + Cl^-$

$\downarrow B:^-$

$CH_4 + CH_2{=}CHN(CH_3)_2 \xleftarrow{Na} CH_2{=}CH\overset{+}{N}(CH_3)_3 + N(CH_3)_3 + B{:}H$

The base ($B:^-$) involved in Reaction III is probably $CH_3{:}Na$ that may be formed from the cleavage of $(CH_3)_4NCl$ or the dipolar ion (I) above. The base ($B:^-$) in Reaction IV may be either of these or $CH_2{=}CH{-}O{-}CH_2CH_2{-}O{:}Na$ (a proposed cleavage product of dioxane).[6]

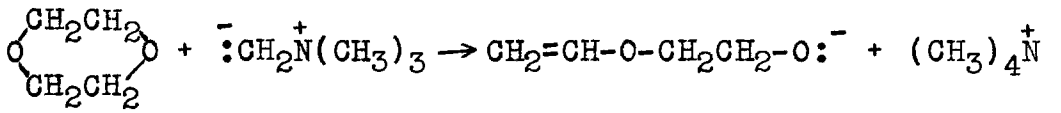

(VI) $(CH_3)_4\overset{+}{N}\overset{-}{C}l + 2\ Na\cdot \rightarrow CH_3^-{:}\overset{+}{N}a + (CH_3)_3N + NaCl$

The trimethylamine formed could come from Reactions IV and VI above.

The results of this work show that trimethylamine is formed in the largest amount, ethyldimethylamine next, and vinyldimethylamine in the least amount. The products from a typical reaction are estimated as follows:

$$\bar{:}CH_2N(CH_3) \xrightarrow{Na} \underset{(14.2\%)}{(CH_3)N} + \underset{(11.2\%)}{CH_3CH_2N(CH_3)_2} + \underset{(1.3\%)}{CH_2{=}CHN(CH_3)_2}$$

From this it can be seen that at least 50% of the reaction to give amines is V followed by VI since the formation from IV can account for less than 10% of the trimethylamine formed. There was no noticeable evolution of methane which would be expected from this reaction. It may be that the methane was so small in amount and formed over such a long reaction period that it diffused out of the system. The gases swept from the system at the end of the reaction by nitrogen were not checked for methane.

CHAPTER II

EXPERIMENTAL DETAILS

Preparation of Quaternary Ammonium Salts

Chloromethyltrimethylammonium Bromide.--Methylene chlorobromide (2.00 moles) was mixed with trimethylamine (2.00 moles)(625 ml. of 3.2 N methanolic solution) in a one liter glass stoppered bottle. The mixture was cooled to 0° for one and one-half hours, stored in the refrigerator for 63 hours, and then stored at room temperature for 48 hours. At the end of this time the reaction was found to be 97.3% complete as determined by HCl titration of the unreacted amine. The mixture was allowed to stand at room temperature for two more days and then cooled in the refrigerator for two days to effect crystallization of the salt. The crystals of salt were then filtered and the methanol distilled from the remaining liquid to give a second batch of salt. The combined product was dried in the vacuum oven for 24 hours at 50° and stored in a P_2O_5 dessicator. The crude yield was 92.9% based on amine used. The salt was recrystallized from methanol, but in an attempt to remove the methanol the flask broke. About 1.2 moles was isolated from the recrystallization for a purified yield of about 60% based on amine used. It is believed that the crude salt was

essentially pure and that the purified yield should be above 90%.

<u>Chloromethyltrimethylammonium Chloride</u>.--Several attempts were made to prepare $ClCH_2\overset{+}{N}(CH_3)_3\bar{C}l$ by the reaction of CH_2Cl_2 and $(CH_3)_3N$ in methanol at 100°. In each case a product with an ionizable chloride analysis too high was obtained (calc. for $ClCH_2N(CH_3)_3Cl$ 24.63%, found 36.28%, 36.41%). It was first believed that methanolysis of the $ClCH_2\overset{+}{N}(CH_3)_3\bar{C}l$ took place and $(CH_3)_3N{\cdot}HCl$ was obtained (calc. for $(CH_3)_3{\cdot}HCl$ 37.10%). A second possibility was that the $ClCH_2\overset{+}{N}(CH_3)_3\bar{C}l$ reacted with a second mole of $(CH_3)_3N$ to form the diammonium salt $(CH_3)_3\underset{Cl^-}{\overset{+}{N}}CH_2\underset{Cl^-}{\overset{+}{N}}(CH_3)_3$ (calc. for $(CH_3)_3\underset{Cl}{N}-CH_2\underset{Cl}{N}(CH_3)_3$ 35.0%). This second case seems more likely for the following reasons.

I. A reaction was run with CH_2Cl_2 and $(CH_3)_3N$ in methanol at room temperature with the same results obtained above; i.e., the ionizable chloride analysis was high. A similar reaction was run between CH_2ClBr and $(CH_3)_3N$ in methanol at refrigerator temperature and the correct product ($ClCH_2\overset{+}{N}(CH_3)_3\bar{B}r$) was obtained according to ionizable and total halogen determinations. This salt was recrystallized from methanol on the steam bath and no change was observed. This would indicate that it was not methanolysis that took place since the same cation, $ClCH_2\overset{+}{N}(CH_3)_3$ was

present in each case.

II. A reaction between CH_2Cl_2 and $(CH_3)_3N$ in methyl ethyl ketone at 100° gave a product whose chloride analysis was above that of the expected product $ClCH_2\overset{+}{N}(CH_3)_3\bar{C}l$. Here no alcohol was present for alcoholysis to take place.

III. It has been found possible to prepare the desired compound by reaction of CH_2Cl_2 (1 mole) and $(CH_3)_3N$ (.1 mole)(20 ml. of 5 N solution in methyl ethyl ketone) at room temperature. A reaction was carried out on a larger scale reacting CH_2Cl_2 (7.0 moles) and $(CH_3)_3N$ (0.70 mole) (205 ml. of 3.41 N acetone solution) at room temperature for four days and the crystals were filtered. No attempt was made to recover the salt dissolved in the solvent. The yield was 74.5% based on the amine used. The halogen determination indicated that no further purification was necessary.

IV. Davies, Evans, and Hulbert[35] prepared $ClCH_2N(CH_3)_3\bar{C}l$ by the reaction of CH_2Cl_2 and $(CH_3)_3N$ in aqueous acetone but did not characterize the product. They used about a 6 to 1 excess of methylene halide to amine. Schmidt and Litterschied[36] found that the reaction of dihalomethane compounds

---

[35] W. C. Davies, E. B. Evans, and F. L. Hulbert, J. Chem. Soc., 412 (1939).

[36] E. Schmidt and F. M. Litterschied, Ann., 316, 157 (1901).

with trimethylamine at room temperature gave the monoammonium salt. The same reaction at 100° gave the monoammonium salt and formaldehyde and tetramethylammonium halide. Schmidt and Kleine[37] found that $BrCH_2CH_2Br$ and $(CH_3)_3N$ gave the monoammonium salt below 50° but above 50° with excess alcoholic amine a variety of products including the mono- and diammonium salts. From these results it seems that in the presence of excess amine or at high temperatures or both, the formation of the diammonium salt takes place to a large extent.

Reaction of Chloromethyltrimethylammonium Chloride with Sodium in Dioxane

Materials.[a]--0.1121 mole chloromethyltrimethylammonium chloride
0.5 mole sodium
250 ml. dioxane

Apparatus.--As described in apparatus section under Part I, Apparatus III.

Procedure.[b]--The system was swept with nitrogen and while the nitrogen passed through the system the solvent and sodium

---

[37] E. Schmidt and G. Kleine, Ann., 337, 81 (1904).

[a] Materials as used in Run 2.

[b] Also see Tables 17 and 18 for further details.

were added and the rubber tube connecting the ammonium salt flask put in place and wired. The sweeping was then stopped and the gas line connected to the collection bottle. The heating was started and when the solvent was refluxing the stirring started. When no sodium particles were visible the addition of the ammonium salt was started. The salt was added in small increments over a period of about three and one-half hours. Near the end of the reaction the heat was increased to start the distillation of solvent. When about one-half of the solvent had distilled, an equivalent amount of dioxane was added from a separatory funnel at the top of the column. One-half of the solvent was again distilled. At the end of the distillation the heat and stirrer were turned off and the system swept with nitrogen. The amines in the traps and the distilled solvent were combined and the per cent yield of amines determined by a titration of an aliquot of the solution with NaOH solution. The amine hydrochloride solution was concentrated by distilling most of the water and solvent on the steam bath. The remaining solution was cooled and about 200 ml. of ether added. The mixture was then treated with an excess of solid KOH to release the amines to the ether phase and remove the water. The ether phase was decanted and treated with an excess of anhydrous HCl. The precipitated amine hydrochlorides were filtered and dried in the vacuum oven at 70°C. A sample

of the dry salt was weighed and titrated with silver nitrate solution using dichloroflourescein indicator. The average equivalent weight of the amine hydrochloride was determined from this titration.

The amine hydrochlorides from the three runs were combined and dissolved in a small amount of water. To this was added about 200 ml. of ether and the mixture treated with an excess of solid KOH. The ether phase was decanted and treated with an excess of methyl iodide. After standing overnight the crystalline iodides were filtered. They were dissolved in about 100 ml. of water and treated with an excess of freshly prepared silver oxide. This mixture was shaken in the shaking machine for several hours and then the silver salts filtered and washed with several portions of water. The solution of quaternary ammonium hydroxides was distilled and the hydroxides pyrolyzed. The gases from the pyrolysis were collected over brine and the system swept with nitrogen at the end of the pyrolysis. The gas from the pyrolysis was analyzed for total unsaturates using the Orsat analyzer. The infra-red spectra of the gas was run and showed all the bands present in ethylene. This comparison was made by running a known sample of ethylene on the same recording paper. The presence of ethylene supplies evidence that ethyldimethylamine was formed in the reaction. The infra-red spectra also showed three

bands that are present in acetylene. These bands were present at the following wavelengths: very intense band at 13.75 ± 0.1 microns with much fine structure from 12.75 to 14.75 microns, a weak band at 7.70 ± 0.1 microns, and a very weak band at 7.75 ± 0.1 microns. These were the only bands present that could not be shown to be also present in the known ethylene spectra. (The acetylene spectra used for comparison was one prepared by J. A. Brown of this laboratory.) From the spectra used for the comparison of the known and unknown ethylene it was observed that the per cent transmission for the two was essentially the same at the various maxima. Since the partial pressure of the ethylene in the known sample was known (93 mm.), and the total per cent unsaturates from the pyrolysis reaction known (13.92%), it was possible to make an approximate calculation showing the relative amounts of ethylene and acetylene. This calculation was made and it was found that about 90% of the unsaturates was ethylene and 10% of the gases acetylene. Using this information it was possible to calculate an average equivalent weight of the ethyldimethylamine-vinyldimethylamine hydrochloride mixture and from the equivalent weight determined experimentally for the mixed hydrochlorides and from the calculated equivalent weight of trimethylamine hydrochloride, the per cent ethyldimethylamine and vinyldimethylamine formed from the re-

action was estimated. Since the total per cent amines from the reaction was determined, the per cent trimethylamine was obtained by difference. The volume of unsaturates from pyrolysis of the quaternary ammonium salts gave a 74.9% yield of ethylene and acetylene based on the calculated quantity of ethyldimethylamine and vinyldimethylamine estimated present. Part of the loss can be accounted for in mechanical losses in the many steps involved. According to the results of Ingold and coworkers, the pyrolysis of ethyltrimethylammonium hydroxide should give a 95% yield of olefin.[38] This, too, can account for some loss since the per cent recovery of ethylene and acetylene was calculated assuming 100% reaction to give olefin.

The sodium remaining in the reaction flask from Run 3 was destroyed with ethanol and then about 150 ml. of water added. Two phases resulted from the water addition. About 250 ml. of ether was added and the mixture shaken and the ether phase decanted. The ether was evaporated on the steam bath and about 10 g. of a dark brown oil remained. After standing on the desk overnight the oil developed a semi-solid, waxy crust of dark brown material. The oil was filtered and distilled from a small flask. A portion of about 4 g. boiling up to 180° using water aspirator vacuum and a portion of about 2 g. boiling up to

---

[38] C. K. Ingold and C. C. N. Voss, J. Chem. Soc., 3125 (1928).

170° at 15 mm. was collected. The first fraction collected had a light yellow color, the second fraction an orange color, and the material remaining in the flask (about 1 g. of solid) a dark brown color. The first fraction was redistilled at 10 mm. and found to boil between 98-135°. The yellow color persisted. All of the fractions were characterized by camphor-like odor. A small amount of dark brown material remained in the flask. Two sodium fusions on the first fraction failed to show the presence of either nitrogen or halogen. About 10 drops of this fraction was refluxed with 10 ml. of 10% HCl for five hours. The solution failed to give an aldehyde test with Fushin aldehyde reagent. The material darkened and appeared to polymerize during the refluxing. Three or four drops of the low boiling fraction were dissolved in 2 ml. of CCl_4 and treated with bromine water. The bromine color disappeared on shaking. The same amount was dissolved in acetone and treated with two or three drops of 15% $KMnO_4$ solution. The red color disappeared in a few minutes and a brown precipitate resulted. The low boiling fraction was found to be insoluble in water, but soluble in ether, acetone, and benzene.

Table 17. Typical Reaction Rate for $ClCH_2N(CH_3)_3Cl$

Plus 0.5 Mole of Na in Dioxane from Run No. 3

Time hr.	Time min.	Volume of gas (ml.)	Remarks
	0	0	The system was swept with N_2 and then the solvent and sodium added. While the N_2 passed through the system the rubber tube connecting the salt flask and the reaction flask was attached. The heat was turned on.
	20	0	The flow of N_2 into the system was stopped and the gas line connected to the collection bottle. The stirring was started and the sodium particle size is good.
	24	0	A small amount of compound was added.
	32	0	The solution has a pink color.
	47	0	A small amount of compound was added.
1	24	0	" " " " " " "
1	54	0	" " " " " " "
2	45	0	" " " " " " "
3	15	0	" " " " " " "
3	45	0	" " " " " " "
4	15	0	" " " " " " "
			The solvent was refluxed in the salt flask and the remainder of the salt washed out.
9	20	0	One-half of the solvent was distilled, then about 125 ml. of dioxane was added and about 125 ml. of the solvent again distilled. The stirring was stopped and N_2 passed into the system.
10	20	4000	The flow of N_2 into the system was stopped and the collection bottle sealed.

Table 18. Gaseous Reaction Products of $ClCH_2N(CH_3)_3Cl$

Plus 0.5 Mole of Na in Dioxane

Run No.	Moles salt	Time of reaction(a)	Volume of N_2 added	Per cent $(CH_3)_3N$	Per cent $C_2H_5N(CH_3)_2$	Per cent $CH_2{=}CHN(CH_3)_2$
1	0.1013	4 hr. 38 min.	3400 ml.	7.6	10.7	1.2(b)(e)
2	0.0802	4 hr. 2 min.	4000 ml.	20.6	12.8	1.4(c)(e)
3	0.1121	9 hr. 56 min.	4000 ml.	14.2	11.4	1.3(d)(e)

(a) The initial time was taken as that time when the first addition of salt took place. The final time was taken as that time when the stirring and heating were stopped.

(b) The amines were recovered from about 100 ml. of distilled solvent.

(c) The solvent was distilled to dry flask and the amines isolated from the distilled solvent.

(d) In this run about one-half of the solvent was distilled and then an equivalent amount of dioxane added and distilled. The amine was isolated from the distilled solvent but not that remaining in the reaction flask.

(e) The average ratio of $C_2H_5N(CH_3)_2$ to $CH_2{=}CHN(CH_3)_2$ was determined upon the combined amines from the three runs. This ratio is assumed to hold for the individual runs.

APPENDIX A

ORSAT ANALYSIS AND SAMPLE CALCULATIONS FOR THE GASES FROM THE REACTION OF $(n\text{-}C_4H_9)_4NBr$ WITH SODIUM IN DIOXANE-*t*-AMYL ALCOHOL

Concentration of Orsat Solutions.--Confining liquid: 20% Na_2SO_4 in 5% H_2SO_4. (Prepared by dissolving 20 g. of Na_2SO_4 in 80 g. of 5% (by weight) H_2SO_4.)

Unsaturate solution: 22% mercuric sulfate in 22% sulfuric acid. (Prepared by dissolving 22 g. of mercuric sulfate in 78 g. of 22% (by weight) sulfuric acid.)

Sodium Hydroxide solution: 50% by weight aqueous NaOH. (Prepared by dissolving 500 g. of NaOH in 500 g. of water.)

Results[a].--(All volumes are expressed in milliliters.)

Run number	1	2	Average
Volume of original sample	50.4	50.1	
Volume after $HgSO_4$-H_2SO_4	49.1	48.8	
Volume of unsaturates	1.3	1.3	
Per cent of unsaturates	2.58%	2.59%	2.58%
Volume of oxygen added	61.6	64.6	
Total volume	110.7	113.4	

[a]The results shown are from the experimental data from Run 4 of $(n\text{-}C_4H_9)_4NBr$ plus sodium in dioxane-*t*-amyl alcohol.

	1	2	Average
Volume after combustion	51.7	54.6	
Volume after NaOH	31.5	34.4	
Volume of carbon dioxide	20.2	20.2	
Volume of butane	5.05	5.05	
Per cent butane	10.0%	9.82%	9.91%
Contraction due to butane[a]	17.6	17.6	
Contraction due to hydrogen[a]	42.4	42.2	
Volume of hydrogen	28.2	28.2	
Per cent hydrogen	55.9%	56.3%	56.1%

Calculations.--

Weight of ammonium salt used	16.119 g.
Equivalent weight of salt	322.38 g.
Number of equivalents used	0.0500
Theorectical volume of gas at[b] 25°C./740 mm.	1257 ml.
Total volume of gases collected including N_2	8000 ml.
Correction for partial pressure of water vapor (-2.4%)	192 ml.[b]
Volume of dry gases collected including N_2 at 25°C./740 mm.	7808 ml.
Volume of unsaturates collected	201 ml.
Volume of butane collected	774 ml.

[a]See calculations based on contraction on page 100.

[b]See calculations on page 101.

Volume of hydrogen collected	4380 ml.
Volume of butane and unsaturate	975 ml.
Volume per cent yield of butane and butene calculated on the basis of the amt. of salt used	76.5%

<u>Calculation based on contraction</u>.--

$$Y\ C_nH_{2n+2} + Y(\frac{3n+1}{2})\ O_2 = Yn\ CO_2 + Y(n+1)\ H_2O$$

Contraction due to burning hydrocarbon:

$$Y + Y(\frac{3n+1}{2}) - Yn = Y(\frac{n+3}{2})$$

Since $Y = (CO_2)/n$, contraction $= \frac{(CO_2)}{n}\ \frac{(n+3)}{2}$ where

(CO_2) = volume of CO_2.

Substituting in known values and solving for "n":

$$17.6 = \frac{20.2}{n}\ (\frac{n+3}{2})$$

$$n = 4.040$$

Contraction due to burning hydrogen:

$$X\ H_2 + \frac{X}{2}\ O_2 = X\ H_2O$$

Therefore the volume of hydrogen is $\frac{2}{3}$[(total contraction on combustion) - (contraction due to combustion of saturated hydrocarbons)].

Corrections applied to total volume of gases collected.--

(a) Correction to standard temperature and pressure assuming the ideal gas law.

Volume occupied by one mole = $22,414\frac{(298)}{(273)}\frac{(760)}{(740)}$ = 25,140 ml. at 740 mm. pressure and 25°C.

(b) Correction for vapor pressure of water in collection bottle.

Solubility of NaCl in water at 25°C. = 36.15 g./100 g. water[39]

$100\ R = \frac{100(P_o-P)}{MP_o}$[40], $100\ R = 4.01$[41], $M = \frac{361.5}{58.455} = 6.18$

(M represents the number of moles of salt soluble in 1000 g. of water.)

P_o = 23.75 mm. at 25°C.[42] (P_o is the vapor pressure of pure water at the temperature specified.)

Therefore P = 17.87 mm. at 25°C = water vapor pressure over a saturated solution of sodium chloride at 25°C.

Pressure in bottle = 740 mm.

Correction to volume of gases collected = $-\frac{17.87}{740}(100) = -2.40\%$.

---

[39] C. D. Hodgman, ed., Handbook of Chemistry and Physics, Chemical Rubber Publishing Co., Cleveland, Ohio, 1944, 28th ed., p. 1335.

[40] E. W. Washburn, ed., International Critical Tables, McGraw-Hill Book Co., New York, N.Y., 1933, Vol.3, p. 292.

[41] Ibid., p. 297.

[42] C. D. Hodgman, ed., Handbook of Chemistry and Physics, Chemical Rubber Publishing Co., Cleveland, Ohio, 1944, 28th ed., p. 1753.

APPENDIX B

CALCULATION OF THE RATE OF PYROLYSIS OF $CH_3N(\underline{n}\text{-}C_4H_9)_3I$ IN BOILING DIOXANE-t-AMYL ALCOHOL AT 100°C.

Since there was no data readily available for the rate of reaction of tri-n-butylamine with methyl iodide, the data of Brown and Eldred[43] for the reaction of triethylamine with methyl iodide has been used. Brown and Eldred found for the reaction of triethylamine and methyl iodide in nitrobenzene the following:

$$\text{(I)} \quad (C_2H_5)_3N + CH_3I \underset{}{\overset{k}{\rightleftharpoons}} (C_2H_5)_3NCH_3I$$

$k = 3.29 \times 10^{-2}$ l./mole sec. at 25°C. in nitrobenzene

$E_a = 9.7$ kcal.

$\log PZ = 5.65$, where $\log k = \log PZ + \frac{-E_a}{RT(2.303)}$

At 100°C. (the approximate temperature in the reactions carried out with the ammonium salt plus sodium) the rate of reaction between triethylamine and methyl iodide may be calculated as follows:

$$\log k = 5.65 - \frac{9700}{(1.987)(373)(2.303)}$$

$\log k = -0.04 \qquad k = 9.1 \times 10^{-1} \cong 1$ l./mole sec.

---

[43] H. C. Brown and N. R. Eldred, J. Am. Chem. Soc., 71, 447 (1949).

We assume the rate of reaction of $(C_2H_5)_3N$ with CH_3I is twice as fast as the reaction of $(\underline{n}\text{-}C_4H_9)_3N$ with CH_3I. We further assume that the rate of reaction in the solvent used (dioxane-t-amyl alcohol) is the same as it would be in methanol. From the values listed by Hammett[44] for the relative reaction rates in various solvents of pyridine with ethyl iodide (methanol = 2.5, nitrobenzene = 25), we assume that our reaction medium is 1/10 as fast as that used by Brown and Eldred. Thus, corrected for our solvents and reactants, $k = \frac{1}{10} \times \frac{1}{2} \times 1 \cong 5 \times 10^{-2}$ l./mole sec.

From the test for the pyrolysis of $CH_3N(\underline{n}\text{-}C_4H_9)_3I$, it was found that no precipitate formed in 300 ml. of solution containing 0.02 mole of silver nitrate.

Solubility of AgI in water = 3×10^{-7} g./100 g. H_2O [45]

Solubility of AgI in water = $\frac{3 \times 10^{-7} \times 10}{234} \cong 10^{-8}$ mole/l.

In the test made, the concentration of $Ag^+ = \frac{0.02}{0.30} \cong 0.07$ mole/l.

Solubility product of AgI $\cong 10^{-16}$

Therefore a concentration of $I^- \cong \frac{10^{-16}}{0.07} \cong 10^{-15}$ mole/l.

or greater would be required to precipitate AgI in water

---

[44] L. P. Hammett, Physical Organic Chemistry, McGraw-Hill Book Co., Inc., New York, 1940, p. 215.

[45] N. A. Lange, Handbook of Chemistry, Handbook Publishers, Inc., Sandusky, Ohio, 1949, p. 269.

(a smaller concentration of I^- would be required in our organic solvent). It would not be possible to see more than 0.0002-3 g. of AgI or about 10^{-6} mole. Therefore we can assume the maximum amount of I^- to be 10^{-6} mole. The maximum concentration of I^- would then be $\frac{10^{-6}}{0.25} \cong$ 4×10^{-7} mole/l.

$$\text{(II)} \quad (\underline{n}\text{-}C_4H_9)_3N + CH_3I \underset{k_{-1}}{\overset{k_1}{\rightleftharpoons}} (\underline{n}\text{-}C_4H_9)_3\overset{+}{N}CH_3\overset{-}{I}$$

$$4 \times 10^{-7} \quad 4 \times 10^{-7} \quad 0.32 \quad 0.32$$

$$K_e = \frac{0.32 \times 0.32}{4 \times 10^{-7} \times 4 \times 10^{-7}} \geqq \sim 6 \times 10^{11}$$

$$k_{-1} = \frac{k_1}{K_e} \leqq \frac{5 \times 10^{-2}}{6 \times 10^{11}} \leqq \sim 10^{-13}$$

where K_e is the equilibrium constant for reaction (II). Assuming that the iodide concentration diminishes during the course of the reaction at the same rate as the ammonium ion and using the integrated form for a second order irreversible reaction where the initial concentrations are equal, we find

$$\frac{X}{(a - x)\ a} = kt$$

$$\frac{X}{(0.32 - x)\ 0.32} \cong 10^{-13} \times 900^{a}$$

$$X \cong 10^{-11} \text{ mole/l.}$$

---

[a]The time was taken as the average time for reaction of $CH_3N(\underline{n}\text{-}C_4H_9)_3I$ plus sodium.

where X is the number of moles/l. undergoing the reverse reaction or, in this case, pyrolysis.

BIBLIOGRAPHY

1. H. Emde, Archiv der Pharmazie, 244, 289 (1906).

2. H. Emde, et.al., ibid., 249, 118, 106 (1911); 272, 469 (1934); 247, 369 (1909).

3. P. Groenewond and R. Robinson, Journal of the Chemical Society, 1934, 1692.

4. J. v. Braun, et.al., Berichte der deutschen chemischen Gesellschaft, 49, 501 (1916); 55, 3803 (1922).

5. T. S. Stevens, E. M. Creighton, A. B. Gordon, and M. MacNicol, Journal of the Chemical Society, 1928, 3193.

6. H. Emde and A. Runne, Archiv der Pharmazie, 249, 371 (1911).

7. D. A. Gordon, Ph. D. Thesis, Georgia Institute of Technology, 1953.

8. H. v. Hartel, N. Meer, and M. Polanyi, Zeitschrift fur physikalische Chemie, 19B, 139 (1932).

9. A. A. Morton, et.al., Journal of the American Chemical Society, 58, 1697 (1936); 64, 2240 (1942).

10. L. F. Fieser, Experiments in Organic Chemistry, D. C. Heath and Co., New York, 1941, 2nd ed., p. 369.

11. Ibid., p. 359.

12. Ibid., p. 360.

13. R. L. Shriner and R. C. Fuson, Identification of Organic Compounds, John Wiley and Sons, Inc., New York, 3rd ed., p. 91.

14. C. S. Marvel and H. B. Gillispie, Journal of the American Chemical Society, 48, 2943 (1926).

15. C. D. Hodgman, Ed., Handbook of Chemistry and Physics, Chemical Rubber Publishing Co., Cleveland, Ohio, 28th ed., 1944, p. 394.

16. H. T. Clarke, Journal of the Chemical Society, 103, 1696 (1913).

17. I. M. Heilbron, Dictionary of Organic Compounds, Oxford University Press, New York, N. Y., 1943, Vol. 3, p. 722.

18. R. E. Buckles and J. P. Yuk, Journal of the American Chemical Society, 75, 5048 (1953).

19. I. M. Heilbron, op. cit., p. 811.

20. I. M. Heilbron, op. cit., p. 849.

21. S. M. McElvain, The Characterization of Organic Compounds, Macmillan Co., New York, N. Y., 1945, p.214.

22. A. A. Morton and L. M. Redman, Industrial and Engineering Chemistry, 40, 1190 (1948).

23. I. M. Heilbron, op. cit., Vol. 1, p. 683.

24. T. S. Stevens, et.al., Journal of the Chemical Society, 1928, 3193; 1930, 2107, 2119; 1932, 55, 69, 1926, 1932; 1934, 279.

25. G. Wittig, et.al., Justus Liebig's Annalen der Chemie, 555, 133 (1944); 560, 116 (1948).

26. A. Campbell, A. H. J. Houston, and J. Kenyon, Journal of the Chemical Society, 1947, 93.

27. M. Sommelet, Comptes rendus des seances de l'academie des sciences, 205, 56 (1937).

28. L. H. Bock, R. L. Smith, and R. W. Auten, Abstracts of the 116th Meeting, American Chemical Society, Atlantic City, N. J., September 1949, p. 70M.

29. E. D. Hughes and C. K. Ingold, Journal of the Chemical Society, 1933, 69.

30. T. Thompson and T. S. Stevens, Journal of the Chemical Society, 1932, 69.

31. G. Wittig, et.al., Justus Liebig's Annalen der Chemie, 550, 260 (1942); 557, 205 (1947).

32. C. R. Hauser and S. W. Kantor, Journal of the American Chemical Society, 73, 1437 (1951).

33. C. K. Ingold, Structure and Mechanism in Organic Chemistry, Cornell University Press, 1953, pp. 524-8.

34. G. Wittig and M. Rieber, Justus Liebig's Annalen der Chemie, 562, 177 (1949).

35. W. C. Davies, E. B. Evans, and F. L. Hulbert, Journal of the Chemical Society, 1939, 412.

36. E. Schmidt and F. M. Litterschied, Justus Liebig's Annalen der Chemie, 316, 157 (1901).

37. E. Schmidt and G. Kleine, Justus Liebig's Annalen der Chemie, 337, 81 (1904).

38. C. K. Ingold and C. C. N. Voss, Journal of the Chemical Society, 1928, 3125.

39. C. D. Hodgman, op. cit., p. 1335.

40. E. W. Washburn, Ed., International Critical Tables, McGraw-Hill Book Co., New York, N. Y., 1933, Vol. 3, p. 292.

41. Ibid., p. 297.

42. C. D. Hodgman, op. cit., p. 1753.

43. H. C. Brown and N. R. Eldred, Journal of the American Chemical Society, 71, 447 (1949).

44. L. P. Hammett, Physical Organic Chemistry, McGraw-Hill Book Co., Inc., New York, 1940, p. 215.

45. N. A. Lange, Handbook of Chemistry, Handbook Publishers Inc., Sandusky, Ohio, 1949, p. 269.

BIOGRAPHICAL SKETCH

The author was born in Tuxedo, New York on May 14, 1931 to Elwood P. and Marguerite R. Blanchard. He resided in Suffern, New York and Spencer, New York and attended public schools until his graduation from Suffern High School in June, 1949.

The author enrolled at the Georgia Institute of Technology in September, 1949 and received the degree Bachelor of Science in Chemistry in June, 1953. He entered the Graduate Division of the Georgia Institute of Technology in July, 1953 and received the degree Master of Science in Chemistry in June, 1954. During his enrollment at Georgia Tech the author was active in the Chi Psi social fraternity and a member of Tau Beta Pi, Phi Kappa Phi, Phi Lambda Upsilon, and associate member of Sigma Xi. He served as president of Chi Psi and Phi Lambda Upsilon during his senior year.

The author is presently under orders to report for active duty on July 16, 1954 as a Second Lieutenant in the Ordnance Corps of the United States Army.