GEORGIA INSTITUTE OF TECHNOLOGY
OFFICE OF CONTRACT ADMINISTRATION
SPONSORED PROJECT INITIATION

Date: April 8, 1976

Project Title: Superplastically Formed Cores for Structural Sandwich Panels

Project No: E-19-645 (Co-project is E-23-618)

Project Director: Dr. Ervin E. Underwood

Sponsor: National Science Foundation

Agreement Period: From 3/15/76 Until 8/31/78
*24 months budget period plus 6 months for submission of required reports, etc.

Type Agreement: Grant No. ENG75-17968

		ChE		ES&M		TOTAL
Amount:	NSF	E-19-645	$64,300	E-23-618	$47,700	$112,000
	GIT	E-19-333	4,954	E-23-323	19,081	24,035
	TOTAL		$69,254		$66,781	$136,035

Reports Required: Annual Letter Technical, Final Report

Sponsor Contact Person (s):

Technical Matters

Contractual Matters
(thru OCA)

Mr. Gaylord L. Ellis
Grants Officer
National Science Foundation
Washington, D. C. 20550
(202) 632-5965

Defense Priority Rating:

Assigned to: Chemical Engineering (School/Laboratory)

COPIES TO:

Project Director
Division Chief (EES)
School/Laboratory Director
Dean/Director—EES
Accounting Office
Procurement Office
Security Coordinator (OCA)
Reports Coordinator (OCA)

Library, Technical Reports Section ✓
Office of Computing Services
Director, Physical Plant
EES Information Office
Project File (OCA)
Project Code (GTRI)
Other

OA 3/3/76

GEORGIA INSTITUTE OF TECHNOLOGY
OFFICE OF CONTRACT ADMINISTRATION

SPONSORED PROJECT TERMINATION

Date: 12/18/78

Project Title: Superplastically Formed Cores for Structural Sandwich Panels

Project No: E-19-645/E-23-618

Project Director: Dr. E. E. Underwood/C. E. S. Ueng

Sponsor: National Science Foundation

Effective Termination Date: 8/31/78

Clearance of Accounting Charges: 8/31/78

Grant/Contract Closeout Actions Remaining:

- _ Final Invoice and Closing Documents
- x Final Fiscal Report (See Important Notice No. 68)
- _ Final Report of Inventions
- _ Govt. Property Inventory & Related Certificate
- _ Classified Material Certificate
- _ Other _____

Assigned to: Chemical Engineering/Engineering Science & Mechanics (School/Laboratory)

COPIES TO:

Project Director
Division Chief (EES)
School/Laboratory Director
Dean/Director—EES
Accounting Office
Procurement Office
Security Coordinator (OCA)
Reports Coordinator (OCA)

Library, Technical Reports Section ✓
Office of Computing Services
Director, Physical Plant
EES Information Office
Project File (OCA)
Project Code (GTRI)
Other _____

CA-4 (3/76)

GEORGIA INSTITUTE OF TECHNOLOGY
OFFICE OF CONTRACT ADMINISTRATION

SPONSORED PROJECT INITIATION

Date: April 8, 1976

Project Title: Superplastically Formed Cores for Structural Sandwich Panels

Project No: E-23-618 (Co-project to E-19-645)

Project Director: Dr. C. E. S. Ueng

Sponsor: National Science Foundation

Agreement Period: From 3/15/76 Until 8/31/76
*24 months budget period plus 6 months for submission of required reports, etc.

Type Agreement: Grant No. ENG75-17968

Amount:

	ChE			ES&M	TOTAL
NSF	E-19-645	$64,300	E-23-618	$47,700	$112,000
GIT	E-19-333	4,954	E-23-323	19,081	24,035
TOTAL		$69,254		$66,781	$136,035

Reports Required:
Annual Letter Technical, Final Report

Sponsor Contact Person (s):

Technical Matters

Contractual Matters
(thru OCA)

Mr. Gaylord L. Ellis
Grants Officer
National Science Foundation
Washington, D. C. 20550
(202) 632-5965

Defense Priority Rating:

Assigned to: Engineering Science & Mechanics (School/Laboratory)

COPIES TO:

Project Director
Division Chief (EES)
School/Laboratory Director
Dean/Director—EES
Accounting Office
Procurement Office
Security Coordinator (OCA)
Reports Coordinator (OCA)

Library, Technical Reports Section ✓
Office of Computing Services
Director, Physical Plant
EES Information Office
Project File (OCA)
Project Code (GTRI)
Other

CA-3 (3/76)

GEORGIA INSTITUTE OF TECHNOLOGY
OFFICE OF CONTRACT ADMINISTRATION

SPONSORED PROJECT TERMINATION

Date: 12/18/78

Project Title: Superplastically Formed Cores for Structural Sandwich Panels

Project No: E-19-645/E-23-618

Project Director: Dr. E. E. Underwood/C. E. S. Ueng

Sponsor: National Science Foundation

Effective Termination Date: 8/31/78

Clearance of Accounting Charges: 8/31/78

Grant/Contract Closeout Actions Remaining:

_ Final Invoice and Closing Documents
x Final Fiscal Report (See Important Notice No. 68)
_ Final Report of Inventions
_ Govt. Property Inventory & Related Certificate
_ Classified Material Certificate
_ Other _____

Assigned to: Chemical Engineering/Engineering Science & Mechanics (School/Laboratory)

COPIES TO:

Project Director
Division Chief (EES)
School/Laboratory Director
Dean/Director—EES
Accounting Office
Procurement Office
Security Coordinator (OCA)
Reports Coordinator (OCA)

Library, Technical Reports Section ✓
Office of Computing Services
Director, Physical Plant
EES Information Office
Project File (OCA)
Project Code (GTRI)
Other _____

CA—4 (3/76)

Copy for O.C.A.
(Other copies have been mailed and distributed
Charles Ueng)
E-19-645/E-23-618

ENGINEERING COLLEGE

GEORGIA INSTITUTE OF TECHNOLOGY

SCHOOL OF ENGINEERING SCIENCE
AND MECHANICS

225 NORTH AVENUE, N.W.
ATLANTA, GEORGIA 30332

March 10, 1978

Mr. Charles A. Babendreier, Program Director
Structural, Materials and Geotechnical Engineering
Engineering Division, Room 418A
National Science Foundation
Washington, DC 20550

Dear Mr. Babendreier:

This report covers the work done on NSF Grant No. ENG 75-17968, entitled "Superplastically Formed Cores for Structural Sandwich Panels", during the twelve month period from March 12, 1977 to March 11, 1978.

Two copies each of the four published papers are enclosed. The remaining publications will be forwarded as soon as they are available.

We hope that this report is satisfactory in every respect. If there are any questions, please let us know.

Very truly yours,

C. E. S. Ueng, Professor
School of Engineering Scienc
and Mechanics

E. E. Underwood, Principal
Research Engineer
Metallurgy Program
School of Chemical Engineeri

/sam

enclosures

E-19-645

"SUPERPLASTICALLY-FORMED CORES FOR STRUCTURAL SANDWICH PANELS"

SUMMARY REPORT

This report summarizes the research activities and accomplishments during the second year of NSF Grant No. ENG-75-17968, from March 12, 1977 to March 11, 1978. During this period the main efforts were devoted to the following four tasks:

(1) A least-weight analysis was carried out for a hexagonal core configuration in which the thickness of the inclined projection wall could assume different thicknesses than the top or bottom surfaces.

(2) The upper and lower bounds were determined for the shear modulus of the core for both the four-sided and six-sided truncated hollow pyramid configurations.

(3) The optimization phase for maximizing the shear modulus of core configurations with truncated hexagonal hollow pyramids was continued. Good computer results are being obtained and the work is still in progress.

(4) Work was initiated on the optimization of weight distribution between the facing sheets and the core for a bonded sandwich panel. Different objective functions were adopted such as the maximum strength-to-density ratio, maximum stiffness-to-density ratio, etc. This work is still in progress.

Publications and Presentations

During the last twelve months, Dr. Ueng has attended four techni-

cal conferences: (1) The 2nd Annual Engineering Mechanics Specialty Conference held at North Carolina State University, May 1977; (2) The International Conference on Lightweight Structures, sponsored by the International Association of Shell and Spatial Structures, Alma-Ata, USSR, September 1977; (3) The ASCE 1977 Fall Convention and Exhibit, San Francisco, October 1977; and (4) the 14th Annual Meeting of the Society of Engineering Science, Lehigh University, November 1977. The papers presented at these conferences have been included in the Proceedings [1,2,3,4].

An abstract [5] on the topic of superplastically formed sandwich cores for structural panels has been accepted for presentation at the Eighth U. S. National Congress of Applied Mechanics, June 26-30, 1978, Los Angeles, California. Results obtained on the upper and lower bounds of shear modulus of the core [6] are being written up for presentation at the forthcoming Symposium on Future Trends in Computerized Structural Analysis and Synthesis, October 30 to November 1, 1978, Washington, DC. An extended abstract has been accepted and the full length paper will be included in the proceedings.

Other finds of this project will be written up for dissemination and publication as soon as they become available. It is anticipated that two more papers will be written by the end of this project period.

Future Work

Our plans for the next five and one-half months, i.e., until the expiration date of the current grant, is composed of three parts: First, to complete the work still in progress as mentioned above; second, to

initiate an analytical investigation of a core configuration with truncated hollow cores; and third, to complete the experimental verification of the analytical predictions for core configurations with four- and six-sided pyramidal projections.

Research Accomplishments

The methodology developed in this project for the analysis of both simple and more complex core configurations works quite well, as confirmed by the numerous papers published or accepted for publication during this period. The latter can also be viewed as an important contribution of this research effort in themselves.

The results obtained so far have drawn considerable attention from industrial representatives, mainly from aerospace and metal producer sectors. Moreover, at the Alma-Ata Conference, strong interest in our work was expressed by several Soviet scientists.

Personnel and Time Charged

The following persons have been involved in this program during the past 12 months. The time charged to the project is as indicated below:

Both Dr. E. E. Underwood and Dr. C. E. S. Ueng, Co-Principal Investigators, have devoted approximately 1/3-time during the academic quarters and full-time for two months during the summer quarter to this project. The portions over the 1/4-time allocation were paid from other funds.

Mr. T. L. Liu, Graduate Research Assistant and Ph.D. candidate in the School of Engineering Science and Mechanics, has continued his work on this project and will use part of the research results in his thesis.

So far his salary (1/3-time) has been paid from other sources.

Mr. Roy E. Crooks, Graduate student and M. S. candidate in the School of Chemical Engineering, Metallurgy Program, has worked on this project for 12 months at 1/3-time.

Mr. T. J. Maa, Graduate Research Assistant and M. S. candidate in the School of Engineering Science and Mechanics, started his work on this project in January 1978. His salary (1/3-time) is paid from this project.

Since Mr. Liu's salary has been paid from other sources, the amount saved here will be used to help defray Dr. Ueng's salary during the 1978 Spring quarter (1/4-time) and two months of the Summer quarter. A request for approval is being prepared and will be submitted soon.

Publications

1. Ueng, C. E. S. and Liu, T. L., "Least Weight of Superplastically Formed Cores", Proceedings of the 2nd Annual ASCE Engineering Mechanics Conference, North Carolina State University, Raleigh, NC, May 23-25, 1977, pp. 440-443.
2. Ueng, C. E. S. and Liu, T. L., "Optimization of a New Light weight Sandwich Core", Proceedings of the International Conference on Lightweight Shell and Space Structures for Normal and Seismic Zones, Alma-Ata, USSR, September 13-16, 1977, Vol. 2, pp. 375-383.
3. Ueng, C. E. S., "Superplastic Forming of New Sandwich Cores", ASCE Fall Convention and Exhibit, San Francisco, CA, October 17-21, 1977, Preprint 3029 (this paper has also been accepted for publication in the ASCE Division Journal).
4. Ueng, C. E. S. and Liu, T. L., "Least Weight Analysis of a New Sandwich Core", Proceedings of the 14th Annual Meeting of the Society of Engineering Science, Lehigh University, Bethlehem, PA, November 14-16, 1977, pp. 273-283.
5. Ueng, C. E. S., "Superplastically Formed Sandwich Cores for Structural Panels", abstract accepted for presentation at the 8th U.S. National Congress of Applied Mechanics, June 26-30, 1978, Los Angeles, CA.
6. Ueng, C. E. S. and Underwood, E. E., "Computer Analysis of Superplastically Formed Sandwich Core", accepted for presentation at and inclusion in the Proceedings of Symposium on Future Trends in Computerized Structural Analysis and Synthesis, Oct. 30-Nov. 1, 1978, Washington, DC.

LEAST WEIGHT OF SUPERPLASTICALLY FORMED CORES

by

Charles E. S. Ueng,[1] M. ASCE and Tung-lin Liu[2]

Sandwich structure has become a well accepted structural form during recent years. It is not only used for the sophisticated aerospace designs, but also in housing construction, transportation, packaging and numerous other applications.

One of the many advantages of a sandwich structure is that it can provide a very high stiffness-weight ratio due to the low density core which is joined together with the upper and lower facing sheets. This special feature can play a very important role in the design of lightweight spatial structures. For structures located in an active seismic zone, it is always desirable to have a lightweight design in order to reduce the associated seismic forces which are generally proportional to the mass or the weight of the structure. Another important feature is that a lightweight design may also increase the natural frequencies of vibration. In using the spectrum curves for seismic integrity design, a higher fundamental frequency can often pass and avoid the peak acceleration reading, and consequently lower the associated seismic forces.

In order to cut down the manufacturing cost of the commonly used aluminum hexagonal sandwich core, and increase the bonding effectiveness, a new method using superplastic material and vacuum forming technique is being developed at Georgia Institute of Technology. In this new process, different core configurations are obtained by heating up the superplastic sheet and then allowing it to collapse gently onto a die having the desired geometry. Reinforcements such as KAVLAR 49 yarn by Du Pont may be preplaced on the die in order to increase the strength. None of these advantages is obtainable in the conventional honeycomb core construction.

There are several interesting problems related to the application of the advances in engineering mechanics in this investigation. They are: (1) Least weight of core structure, (2) Determination of shear

[1]Assoc. Prof. of Engrg. Sci. and Mech., Georgia Institute of Technology, Atlanta, Georgia.

[2]Grad. Res. Asst., Engrg. Sci. and Mech., Georgia Institute of Technology, Atlanta, Georgia.

modulus of the core, (3) Optimization of the core configuration such as to maximize the shear modulus, (4) Stress analysis at critical points in the assembled panel, and (5) Geometrical optimization of assembled sandwich panel. Among the problems just cited here, some of them involve a phase of structural optimization where the titled quantity plays a role as an Objective Function. These objective functions are usually subjected to constraint conditions, equality and/or inequality constraints, such as (1) a minimum or maximum thickness of individual parts of the core structure, (2) the range of inclination of the projection wall, (3) the range of volume percentage of reinforcing wires, (4) the maximum stress level, and (5) the range of core depth.

In this paper, a core configuration of hollow, truncated pyramid of square top and uniform thickness on four sides is considered (see Fig. 1). For a given ρ, the superplastic material density, t, the thickness, and b/d ratio, the minimum density of the core with respect to the inclination angle β can be determined. According to Fig. 1, the weight of one projection or cell may be written as

$$W = b^2 t \rho + 4 \left[\frac{2b + d_1 \cos \beta}{2} \times \frac{d_1}{2} \times t \times \rho \right] \tag{1}$$

Introducing the equivalent core density ρ_c, and letting

$$W = \rho_c V \tag{2}$$

where V is the assumed volume for each projection to be responsible in the core structure, i.e.,

$$V = 2d_1 (b + d_1 \cos \beta)^2 \sin \beta \tag{3}$$

Substituting W from eq. (1) and V from eq. (2) into eq. (3), then one has

$$\frac{\rho_c}{t\rho} = \frac{b^2 + (2b + d_1 \cos \beta) d_1}{2d_1 (b + d_1 \cos \beta)^2 \sin \beta} \tag{4}$$

Setting the derivative of the left hand side of eq. (4) with respect to β to be equal to zero, one has after simplification, the following fourth degree trignometric polynomial,

$$\cos^4 \beta + A_3 \cos^3 \beta + A_2 \cos^2 \beta + A_1 \cos \beta + A_o = 0 \tag{5}$$

where

$$A_o = -\frac{3}{2} r^2 - r^3 \quad , \quad A_1 = -2r - r^2 + r^3 + \frac{1}{2} r^4$$

$$A_2 = -\frac{1}{2} + 4r + 2r^3, \quad A_3 = 4r + \frac{3}{2} r^2 \tag{6}$$

and

$$r = b/d_1$$

By assuming a range of r, i.e., the ratio of b and d_1, then one can solve the roots of eq. (5). This was done by a digital computer. Results are shown in Fig. 2. A check has been carried out to ensure that the second derivative of the same argument with respect to β changes from negative to positive in order to identify that the extremum value is a minimum.

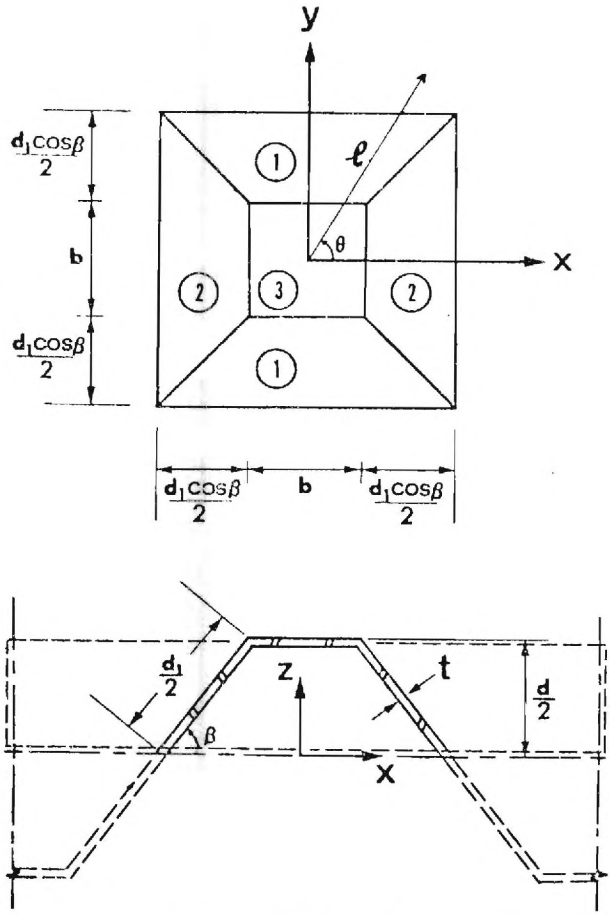

Fig.1 A Unit Projection of the Core

References:

[1]. E. E. Underwood, A., Gomez and C. E. S. Ueng, "Design and Fabrication of New Core Configurations for Sandwich Panels", Proceedings of IV Inter-American Conference on Materials Technology, Caracus, Venezuela, June 29-July 4, 1975, p. 531.

[2]. A. Gomez, "Design and Construction of New Honeycomb Sandwich Cores Using Superplastic Forming and Vacuum Forming Techniques", Ph.D. Thesis, Georgia Institute of Technology, 1976.

Acknowledgement:

This work has been funded by the National Science Foundation under Grant ENG-75-17968.

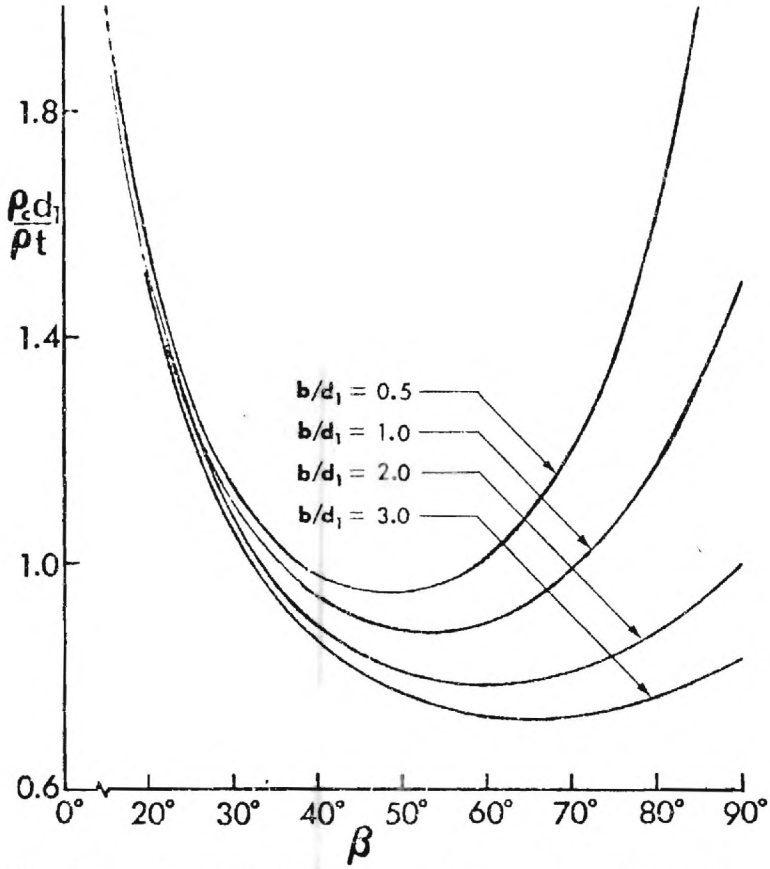

Fig. 2 Equivalent Core Density versus β-angle

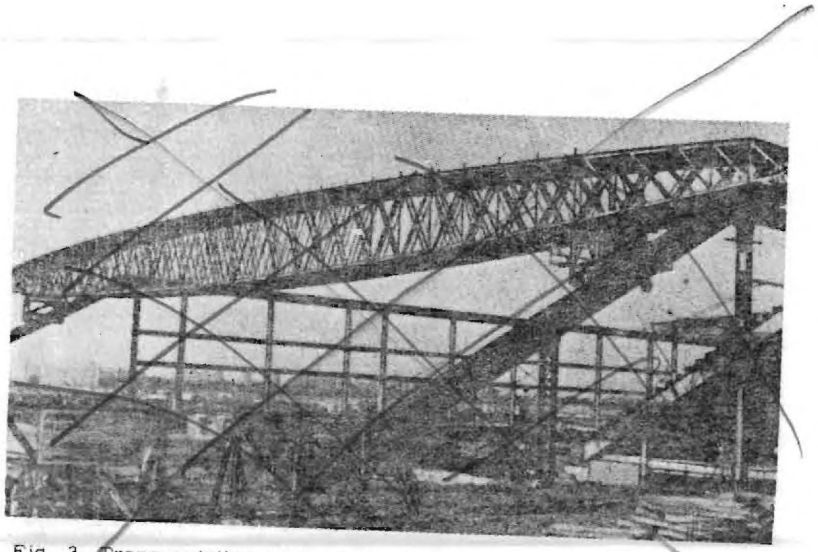

Fig. 3. Transportation of a block along the sloping erection bridge. General view

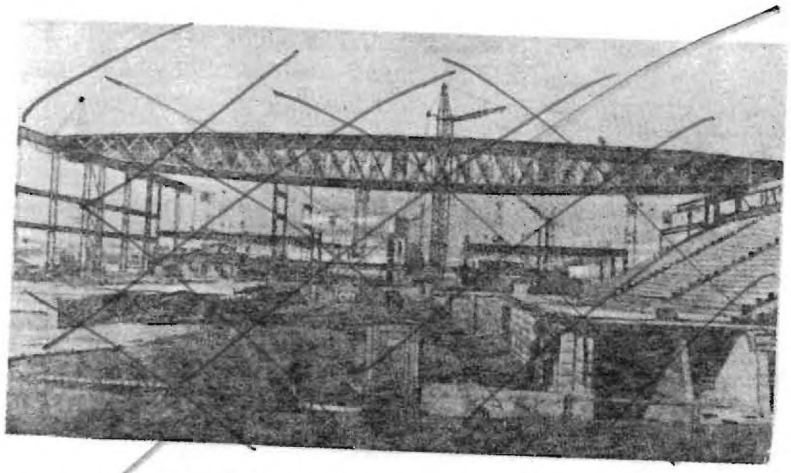

Fig. 4. General view of a block in design position

Ueng, C.E.S., Ph.D. and Liu, T.L., M.S.
Georgia Institute of Technology, USA

OPTIMIZATION OF A NEW LIGHTWEIGHT SANDWICH CORE

Symbols

A	= area of the top
A_i	= functions of b/d_1
b	= top width
d_1	= length of inclined wall
g_i	= inequality constraints
G	= bulk shear modulus
$G_{eff.}$	= effective shear modulus of the core
h_i	= equality constraints
ℓ	= horizontal shear displacement
P_i	= horizontal shear resultants
r_k, s_k	= penalty function parameters
V	= assumed volume for each projection to be responsible
W	= weight of one projection
β	= inclination angle
γ	= overall shear strain of the projection
γ_i	= shear strain in the designated wall
ρ	= bulk material density
ρ_c	= core density
τ_θ	= average shear stress

Introduction

During recent years, sandwich structure has become a well accepted structural form, used not only in the sophisticated aerospace designs, but also in housing construction, transportation, packaging, and numerous other applications.

One of the many advantages of sandwich structure is that it can provide a very high stiffness-weight ratio due to the provision of a low density core. This special feature can play a very important role in the design of lightweight spatial structures. For such a structure located

in an active seismic zone, it is always desirable to have a lightweight design in order to reduce the associated seismic forces which are generally proportional to the mass or the weight of the structure. Furthermore, a lightweight design can also increase the natural frequencies of structural vibration. In using spectrum curves for the structural integrity analysis due to earthquake motion, a higher frequency of vibration can often skip or pass the peak acceleration in a given spectrum curve. Consequently, a lower spectrum acceleration is obtained and a lower seismic force results.

Traditionally, sandwich core is made of aluminum, paper, cellular materials in the shape of hexagon and with vertical walls. Among these, the use of aluminum foil almost dominates all the important structural applications of sandwich panels. In the manufacturing process of aluminum core, the tooling facility is usually quite costly. Besides this, only a line contact between the facing sheets and the core is available for bonding purposes. In order to avoid these two drawbacks, a new method using superplastic material and vacuum-forming technique is being developed at Georgia Institute of Technology. In this new process, different core configurations are obtained by heating up the superplastic sheets and then allowing it to collapse gently onto a die having the desired geometry. Reinforcements such as KAVLAR 49 yarn by DuPont may be pre-placed on the top of the die in order to increase the strength.

In this paper, two problems are investigated and reported:

(1) The least density core of a truncated hollow pyramid shape versus the wall inclination is sought; and

(2) For a given constant volume or weight, the shape of the truncated hollow pyramid is optimized in order to obtain the maximum shear modulus of the core structure. The problem is then reduced to a structural optimization problem subjected to equality and inequality constraints. Penalty functions are then used. Finally, Powell's technique is employed for maximizing the equivalent shear modulus of the core.

In the literature, two books[1] and [2] are available on the topic of sandwich construction. Plantema[1] compiled the derivation of sandwich beams and plates with emphasis on the solutions of boundary value problems. Allen[2] included additional information for practical design problems. Chang and Ebcioglu[3] presented a simple analytic theory for the effect of cell geometry on both the shear modulus and the density of sandwich core of a standard hexagonal honeycomb shape. Penzien and Didriksson[4] investigated the effective shear modulus of honeycomb core structure, including both analytical and experimental investigations.

The core of a sandwich panel is essentially assumed to resist the transverse shear forces. In fact, almost all the research work done on this subject has been based upon this assumption[1-2] (and the references quoted there). For the purpose of having an efficient design, the core must be lightweight and strong in carrying the loadings, particularly the transverse shear. Because the core has a relatively low shear moduli in comparison with the counterpart of the facing sheets, the sandwich panel will, in general, experience appreciable shear deformations. The amount of shear deformations produced may be important for the design criteria. Therefore, it is essential that design engineers be able to predict these deformations analytically. To make these predictions possible, however, the effective or overall shear modulus of the core structure must be known. The purpose of this paper is an attempt to answer these questions.

Analysis

1. Minimum Density Core Problem

In this investigation, a truncated hollow pyramid shape as shown in Figure 1 is selected. The problem is to seek the minimum equivalent core density with respect to the inclination angle β for a given ρ, t and the ratio b/d_1. According to Figure 1, the weight of one projection or cell may be written as

$$W = b^2 t\rho + 4\left[\frac{2b + d_1\cos\beta}{2} \times \frac{d_1}{2} \times t \times \rho\right]$$

or

$$W = \left[b^2 + (2b + d_1\cos\beta)\, d_1\right] t\rho \qquad (1)$$

Introducing the equivalent core density ρ_c, and letting

$$W = \rho_c V \qquad (2)$$

where V is the assumed volume for each projection to be responsible in the core structure, i.e.

$$V = 2\, d_1 \sin\beta\, (b + d_1\cos\beta)^2 \qquad (3)$$

Substituting W from Eq. (1) and V from Eq. (2) into Eq. (3), then one has

$$\frac{\rho_c}{t\rho} = \frac{b^2 + (2b + d_1\cos\beta)\, d_1}{2d_1\sin\beta\,(b + d_1\cos\beta)^2} \qquad (4)$$

Setting the derivative of $\rho_c/t\rho$ with respect to β to be equal to zero, one has after simplification, the following fourth degree algebraic equation

$$\cos^4\beta + A_3\cos^3\beta + A_2\cos^2\beta + A_1\cos\beta + A_o = 0 \qquad (5)$$

where

$$A_0 = -\frac{3}{2}r^2 - r^3$$

$$A_1 = -2r - r^2 + r^3 + \frac{1}{2}r^4$$

$$A_2 = -\frac{1}{2} + 4r + 2r^3 \qquad (6)$$

$$A_3 = 4r + \frac{3}{2} r^2$$

and

$$r = \frac{b}{d_1}$$

By assuming a range of r, i.e., the ratio of b and d_1, then one can solve the roots of Equation (5). This was done by a digital computer. Results are shown in Figures 2 and 3. Note that a check has been carried out to ensure that the second derivative of the same argument with respect to β changes from negative to positive in order to ensure that the extreme value is a minimum.

2. Determination and Maximization of Shear Modulus of the Core

The new core design provides flat surfaces for bonding purposes with the facing sheets rather than just line edges as in the case of honeycomb cells. The shear stiffness in the new core is expected to be higher than the honeycomb core made of the same material. Furthermore, the new core configuration is likely to provide some resistance to the in-plane forces.

For determining the effective shear modulus of the new core, a basic projection as shown in Figure 1 is considered. Extending the method as used for the case of standard honeycomb core[3] to the new configuration of a truncated hollow pyramid, let the top face of this representative projection be given an arbitrary shear displacement ℓ along θ direction in the horizontal plane. Assuming that the middle xy-plane does not undergo to have any horizontal shear displacement, then the strains, in the overall sense, can be calculated as follows:

The shear strain γ_1 in the two opposite inclined walls denoted by 1 in Figure 1 are approximately equal and can be shown to be

$$\gamma_1 = \frac{\ell \cos\theta}{d_1/2} = \frac{2\ell \cos\theta \sin\beta}{d} \qquad (7)$$

The shear strain γ_2 in the other two opposite inclined walls denoted by 2 in Figure 1 are also about equal, i.e.

$$\gamma_2 = \frac{\ell \sin\theta}{d_1/2} = \frac{2\ell \sin\theta \sin\beta}{d} \qquad (8)$$

The corresponding shear stress in area 1 is $G\gamma_1$. Thus the shear force on the cross-section which is perpendicular to the inclined wall, is

$$P_1 = G\gamma_1 bt = \frac{2\ell \cos\theta \sin\beta}{d} Gbt \qquad (9)$$

Similarly, one can find the shear force on the cross-section which is normal to the inclined wall in area 2, is

$$P_2 = G\gamma_2 bt = \frac{2\ell \sin\theta \sin\beta}{d} Gbt \qquad (10)$$

Thus the shear force resultant is obtained as

$$P = \left[(2P_1)^2 + (2P_2)^2 \right]^{1/2} \qquad (11)$$

or

$$P = 4\frac{\ell}{d} Gbt \sin\beta \qquad (12)$$

with its direction in θ-direction. The average shear stress in the horizontal plane can now be evaluated from Eq. (7). Note that no assumption such as the force direction is the same as that of the displacement has been made here. From Eq. (12), the average shear stress is

$$\tau_\theta = \frac{P}{A} = \frac{4\ell Gbt}{Ad} \sin\beta \qquad (13)$$

where A is the area of the projection square. Substituting $A = 4(b + d_1 \cos\beta)^2$ into Eq. (13) gives

$$\tau_\theta = \frac{\ell Gbt}{d(b + d_1 \cos\beta)^2} \sin\beta \qquad (14)$$

The overall shear strain γ of the projection itself, can be expressed as

$$\gamma = \frac{\ell}{d/2} \qquad (15)$$

Then the effective or equivalent shear modulus of the core structure can be obtained from Equations (14) and (15), i.e.,

$$G_{eff.} = \frac{\tau_\theta}{\gamma} = \frac{Gbt}{2(b + d_1 \cos\beta)^2} \sin\beta \qquad (16)$$

It is desirable to maximize the effective shear modulus. That is, for a given weight, one seeks the optimum geometry of the truncated pyramid such that the shear modulus is a maximum. In order to ensure that the optimized configurations are practically possible, the parameters such as b, t, β, and d_1, must be within certain feasible ranges. From a mathematical point of view, this structural optimization problem is expressible as a maximization subjected to equality and inequality constraints. By introducing the penalty functions, the constrained maximization problem is transformed to a sequence of unconstrained maximization. This method is often called SUMT, Sequencial Unconstrained Minimization Technique. Detailed explanation of this method is available in reference sources[5] and [6].

Taking $G_{eff.}$ given by Eq. (16) as the Objective Function, and the accompanying constraints are:

(i) W = weight per projection, is a constant, i.e.,

$$\left[b^2 + (2b + d_1 \cos\beta)\, d_1\right] t\rho = \text{constant} \tag{17}$$

(ii) t must be no less than t_{min}, i.e.,

$$t - t_{min} \geq 0 \tag{18}$$

(iii) d_1 must be no less than $(d_1)_{min}$, i.e.,

$$d_1 - (d_1)_{min} \geq 0 \tag{19}$$

(iv) b must be greater than zero, i.e.,

$$b > 0 \tag{20}$$

(v) For practical purposes, β must be greater than zero and no greater than $\pi/2$, i.e.,

$$0 < \beta \leq \pi/2 \tag{21}$$

The transformed function $\bar{G}$ can now be formulated as

$$\bar{G}(\bar{X}, r_k, s_k) = G(\bar{X}) + r_k \sum_{m=1}^{M} \frac{1}{g_m(\bar{X})} + s_k \sum_{j=1}^{J} \left[h_j(\bar{X})\right]^2 \tag{22}$$

where

$$\bar{X} = (t, b, d_1, \beta) \tag{23}$$

$$g_1(\bar{X}) = t - t_{min} \geq 0 \tag{24}$$

$$g_2(\bar{X}) = d_1 - (d_1)_{min} \geq 0 \tag{25}$$

$$g_3(\bar{X}) = b > 0 \tag{26}$$

$$g_4(\bar{X}) = \beta > 0 \tag{27}$$

$$g_5(\bar{X}) = \beta - \frac{\pi}{2} \leq 0 \tag{28}$$

and

$$h_1(\bar{X}) = W - \left[b^2 + 2b + d_1 \cos\beta)\, d_1\right] t\rho = 0 \tag{29}$$

In the numerical computation, first, a set of values for r_k and s_k is assumed. In addition, t_{min} and $(d_1)_{min}$ are also selected from practicality point of view so the optimized dimensions will be physically possible to be formed by superplastic materials. The transformed function is then maximized by the efficient Powell's method[7]. The maximized nondimensionalized shear modulus versus b/d_1 is plotted in Figure 4 for different values of β.

Discussion and Conclusions

Numerical results as presented in Figures 2 through 4, reveal certain interesting phenomena for the investigation carried out here. Figure 2 provides the relation, between the nondimensional core density and β for different values of b/d_1. It is clear that for each of the four curves shown, there is a minimum for the nondimensional core density at a particular value of β. This information should be useful for seeking the configuration of minimum density core. The curve shown in Figure 3 represents the minimum density curve, i.e., for a given value of b/d_1, one can find the corresponding value of β such that the core density is a minimum.

Finally, Figure 4 provides the relation between the nondimensional shear modulus of the core versus b/d_1 for different values of β. It is noted here that the effective shear modulus increases as b/d_1 increases. Also true is the fact that it gets higher and higher as β approaches to a right angle. Limitations set up on $b/d_1 = 3$ and $\beta = \pi/2$ are due to practical manufacturing reasons.

A truncated hollow pyramid has been selected and investigated here. Other shapes such as a truncated hollow cone and a six-sided truncated hollow pyramid are being studied. Results will be reported at a later time.

Acknowledgement: This research is supported by a National Science Foundation Grant No. ENG 75-17968.

References

1. Plantema, F.J., "Sandwich Construction", John Wiley, 1966.
2. Allen, H.G., "Analysis and Design of Structural Sandwich Panels", Pergamon Press, 1969.
3. Chang, C.C., and Ebcioglu, I.K., "Effect of Cell Geometry on the Shear Modulus and on Density of Sandwich Panel Cores", Journal of Basic Engineering, American Society of Mechanical Engineers, December 1961, pp. 513-518.
4. Penzien, J., and Didriksson, T., "Effective Shear Modulus of Honeycomb Cellular Structure", AIAA Journal, March 1964, pp. 531-535.
5. Fletcher, R., "Mathematical-programming Methods - A Critical Review", Chapter 5, "Optimum Structural Design", edited by R.H. Gallagher and O.C. Zienkiewicz, John Wiley, 1973.
6. More, J., "Penalty-function Methods", Chapter 9, "Optimum Structural Design", edited by R.H. Gallagher and O.C. Zienkiewicz, John Wiley, 1973.
7. Powell, M.J.D., "An Efficient Method for Finding the Minimum of a Function of Several Variables Without Calculating Derivatives", The Computer Journal, Vol. 7, No. 2, July 1964, pp. 155-162.

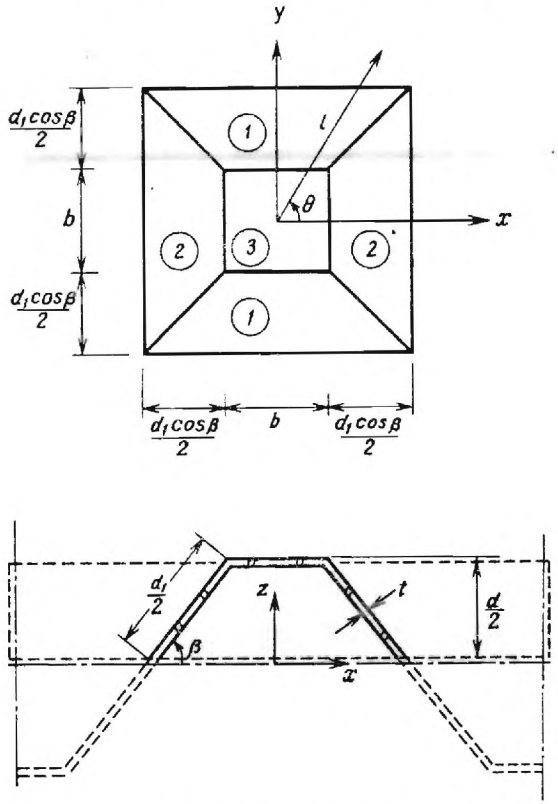

Fig. 1. A Unit Projection of the Core

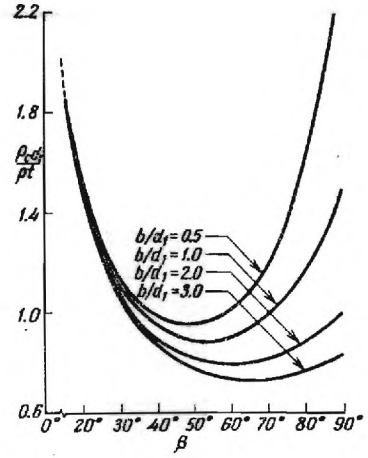

Fig. 2. Equivalent Core Density versus β -angle

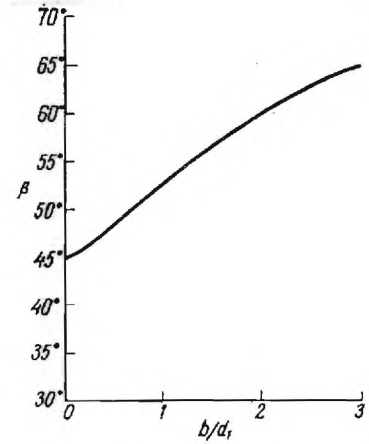

Fig. 3. Minimum Density Curve: β versus b/d_1

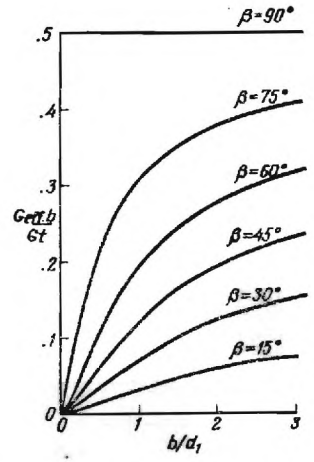

Fig. 4. Nondimensional Effective Shear Modulus versus b/d_1

E-19-645

AMERICAN SOCIETY OF CIVIL ENGINEERS FOUNDED 1852

ASCE FALL CONVENTION AND EXHIBIT

PREPRINT 3029

SUPERPLASTIC FORMING OF NEW SANDWICH CORES

Charles E. S. Ueng

San Francisco, CA Oct. 17-21, 1977 $1.00

SUPERPLASTIC FORMING OF NEW SANDWICH CORES

by

Charles E. S. Ueng*
M. ASCE

INTRODUCTION

The sandwich structure has become an accepted structural form in our modern day world, ever since its first successful application in the British "Mosquito" aircraft during World War II. New applications of this versatile construction material have spread widely in aerospace design, as well as in housing construction, transportation, packaging, etc.

A sandwich panel consists of three layers of material bonded together to act in unison. Figure 1 shows a soft central core bonded with two stiff facing sheets. Traditionally, sandwich core is made of aluminum foil, paper, or cellular materials in the shape of hexagon and with vertical walls. Among these, the use of aluminum foil almost dominates all the important structural application of sandwich panels. In the manufacturing process of aluminum core, the tooling facility is usually quite costly. Besides this, only a line contact between the facing sheet and the core is available for bonding purposes. In order to avoid these two drawbacks, a new method using superplastic material and vacuum-forming technique has been developed at Georgia Institute

*Professor, School of Engineering Science and Mechanics, Georgia Institute of Technology, Atlanta, Georgia 30332.

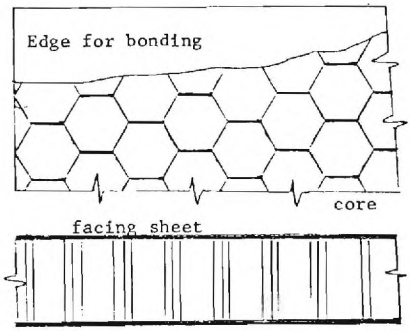

Fig. 1. Standard H/C Sandwich Construction.

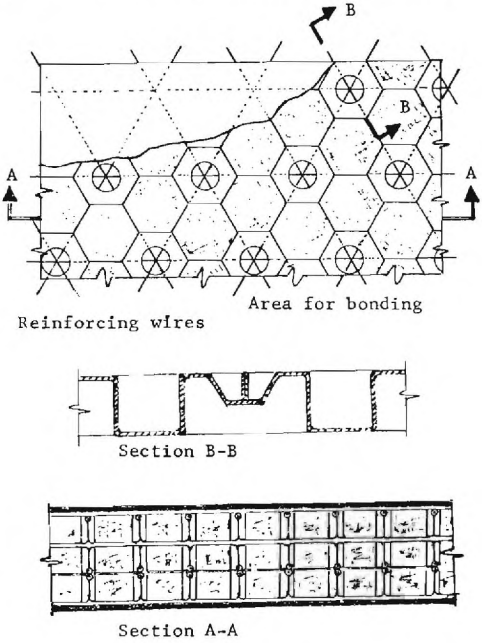

Fig. 2. New Core Design.

Notice that there are bonding areas in the new core design rather than edges as compared to conventional H/C. Wires and columns can improve rigidity and loading capacity of the core.

of Technology (7). In this new process, different core configurations are obtained by heating up the superplastic sheets and then allowing it to collapse gently onto a die having the desired geometry. A new furnace has been designed and constructed, which has the capacity to provide sufficently high temperatures, pressures and vacuums for not only aluminum-zinc superplastic material but also titanium-and iron-alloys. The dies from which the new sandwich cores are made, are designed in such a way that the shape can be gradually varied. Reinforcements such as KEVLAR 49 yarn by Du Pont may be pre-placed on the top of the die in order to increase the strength.

Parallel to the manufacturing of such new sandwich cores, analytic phase is also carried out. Results obtained from one phase are used as a feedback for the other. In this paper, only problems analytically investigated are reported in detail here. They include: (1) Determination and maximization of the shear modulus of the core, and (2) Least weight configuration analysis. For illustration purpose, only configurations of four-and six-sided, truncated hollow pyramids are presented.

It is believed that the new innovation on the superplastically formed sandwich core will offer many potential applications including the future aerospace structural designs.

SHEAR MODULUS OF THE CORE

The core in a sandwich panel serves the same function as the web of an I-beam in that greater flexural rigidity is obtained from the flanges (1,4). In order to achieve this, the core must be strong enough to ensure that the facings remain a proper distance apart. The core must also provide an adequate shear strength so that the facings will not slide relative to each other when the panel is subjected to bending. In the absence of the necessary shear strength,

the two thin facings would act as two independent beams or panels and lose the sandwich effect. Finally, the core must be able to serve as a connecting mechanism or medium for preventing any possible buckling. A successful core design must fulfill the above three basic requirements.

As just noted here, when the core is an integral element of the sandwich panel, the core is essentially assumed to resist the transverse shear forces. In fact, almost all the research work done on this subject has been based upon this assumption (1,4). Because the new core designs provide flat surfaces for bonding to the face plates rather than to the edges as in the case of honeycomb cells, the shear stiffness in the core will be higher than the honeycomb core of the same material. Due to the complexity of the core geometry, only the overall or effective shear modulus of the core can be reasonably determined through a theoretical analysis.

For the determination of the effective shear modulus of the new core, a basic projection of a four-sided, hollow, truncated pyramid as shown in Fig. 3 is considered. Extending the method as used in (2), let the top face of this representative projection be given an arbitrary shear displacement ℓ along θ direction in the horizontal plane. Assuming that the middle xy-plane does not undergo any horizontal shear displacement, then the strains, in the overall sense, can be calculated as follows:

The shear strain γ_1 in the two opposite inclined walls denoted by 1 in Fig. 3 are approximately equal and can be shown to be

$$\gamma_1 = \frac{\ell \cos \theta}{d_1/2} = \frac{2\ell \cos \theta \sin \beta}{d} \qquad (1)$$

Similarly, the shear strain γ_2 in the other two opposite inclined walls denoted by 2 in the same figure is

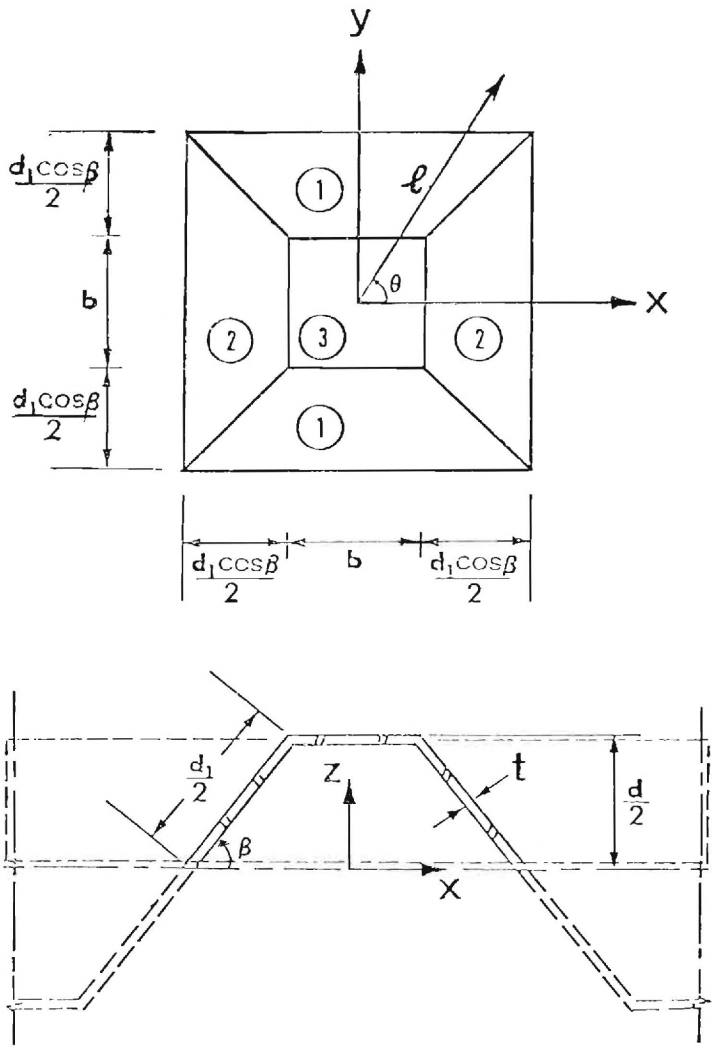

Fig. 3: A Unit Projection of the Core

$$\gamma_2 = \frac{\ell \sin \theta}{d_1/2} = \frac{2\ell \sin \theta \sin \beta}{d} \tag{2}$$

The corresponding shear stress in area 1 is $G\gamma_1$. Thus the shear force on the cross-section which is perpendicular to the inclined wall, is

$$P_1 = G\gamma_2 bt = \frac{2\ell \cos \theta \sin \beta}{d} Gbt \tag{3}$$

Similarly, one can find the shear force on the cross-section which is normal to the inclined wall in area 2, is

$$P_2 = G\gamma_2 bt = \frac{2\ell \sin \theta \sin \beta}{d} Gbt \tag{4}$$

Thus the shear force resultant is obtained as

$$P = \left[(2P_1)^2 + (2P_2)^2 \right]^{1/2} \tag{5}$$

or

$$P = 4 \frac{\ell}{d} Gbt \sin \beta \tag{6}$$

with its direction in θ-direction. The average shear stress in the horizontal plane can now be evaluated from Eq. (1). Note that no assumption such as the force direction is the same as that of the displacement has been made here. From Eq. (6), the average shear stress is

$$\tau_\theta = \frac{P}{A} = \frac{4\ell\ Gbt}{Ad} \sin \beta \tag{7}$$

where A is the area of the projection square. Substituting $A = 4(b + d_1 \cos \beta)^2$ into Eq, (7) gives

$$\tau_\theta = \frac{\ell Gbt}{d(b + d_1 \cos \beta)^2} \sin \beta \tag{8}$$

The overall shear strain γ of the projection itself, can be expressed as

$$\gamma = \frac{\ell}{d/2} \tag{9}$$

Then the effective or equivalent shear modulus of the core structure can be obtained from Eqs. (8) and (9), i.e.,

$$G_{eff.} = \frac{\tau_\theta}{\gamma} = \frac{Gbt}{2(b + d_1 \cos \beta)^2} \sin \beta \tag{10}$$

Suppose that one is interested in maximizing the effective shear modulus, i.e., for a given weight, one seeks the optimum geometry of the truncated pyramid such that the effective shear modulus is a maximum. This question belongs to a broad class of today's engineering problems which are not only related to the least weight design but also to the conservation of materials for the years to come.

In seeking the optimized configurations, the parameters such as b, t, β and d_1, must be within certain feasible ranges such that the optimized configurations, are practically possible. From a mathematical point of view, this structural optimization problem is expressible as a maximization subjected to equality and inequality constraints. From the optimization theory (3), one may employ the penalty functions and transform the constrained maximization. This method is often called SUMT, Sequential Unconstrained Minimization Technique.

Taking $G_{eff.}$ given by Eq. (10) as the objective function, the constraints associated with this problem are:

1. W = weight per projection, is a constant, i.e.,

$$\left[b^2 + (2b + d_1 \cos \beta)\, d_1\right] t\rho = \text{const.} \tag{11}$$

2. t = thickness of the core, must be no less than t_{min}, i.e.,

$$t - t_{min} \geq 0 \tag{12}$$

3. d_1 = length of the inclined wall, must be no less than $(d_1)_{min}$, i.e.,

$$d_1 - (d_1)_{min} \geq 0 \tag{13}$$

4. b = side length of the top square, must be greater than zero, i.e.,

$$b > 0 \tag{14}$$

5. For practical purposes, β = the inclination angle, must be greater than zero and no greater than $\pi/2$, i.e.,

$$0 < \beta \leq \pi/2 \tag{15}$$

Employing the idea of penalty functions in combination with the above constraints, one can formulate the transformed objective function $\bar{G}$ as follows:

$$\bar{G}(\bar{X}, r_k, s_k) = G(\bar{X}) + r_k \sum_{m=1}^{M} \frac{1}{g_m(\bar{X})} + s_k \sum_{j=1}^{J} [h_j(\bar{X})]^2 \tag{16}$$

where

$$\bar{X} = (t, b, d_1, \beta) \tag{17}$$

$$g_1(\bar{X}) = t - t_{min} \geq 0 \tag{18}$$

$$g_2(\bar{X}) = d_1 - (d_1)_{min} \geq 0 \tag{19}$$

$$g_3(\bar{X}) = b > 0 \tag{20}$$

$$g_4(\bar{X}) = \beta > 0 \tag{21}$$

$$g_5(\bar{X}) = \beta - \frac{\pi}{2} \leq 0 \tag{22}$$

and

$$h_1(\bar{X}) = W - \left[b^2 + (2b + d_1 \cos \beta)\, d_1\right] t\rho = 0 \tag{23}$$

The second and third terms on the right-hand side of Eq. (16) may be interpreted as penalty terms which can take care of the constraints and force the solution to

converge to that of the constrained problem. The parameters r_k and s_k perform the weighting between the objective function value and the penalty terms. They are also often called the response factors.

In the numerical computation, first, a set of values for r_k and s_k is assumed. In addition, t_{min} and $(d_1)_{min}$ are also selected from a practical point of view so the optimized dimensions will be physically possible to be formed by superplastic materials. The transformed function is then maximized by the Powell's method (5). The results are shown in Fig. 4 where the relations between the nondimensionalized shear modulus versus b/d_1 are plotted.

LEAST WEIGHT ANALYSIS

Consider a hollow, truncated, hexagonal pyramid as shown in Fig. 5. The problem investigated here is to seek the minimum equivalent core density with respect to the inclination angle β for a given ρ, t, b/t_1 and the ratio m where $m = a/2b$. In order to include the effect of spacing between two neighboring projections, the distance along x-direction from one corner C to the next neighboring corner C_1 is assumed to be arbitrary. Assuming that the center-to-center distance along y-direction is also s, then according to Fig. 5, the weight of a unit projection or cell may be written as

$$W = \rho V_m \tag{24}$$

where V_m is the material volume, i.e.,

$$V_m = \frac{3\sqrt{3}}{2} b^2 t_1 + 6(b + d_1 \cos\beta \cot 60^\circ)\, d_1 t_2$$

$$+ \left[s^2 - \frac{3\sqrt{3}}{2} (b + 2d_1 \cos\beta \cot 60^\circ)^2 \right] t_3 \tag{25}$$

Introducing the equivalent core density ρ_c and letting

$$W = \rho_c V \tag{26}$$

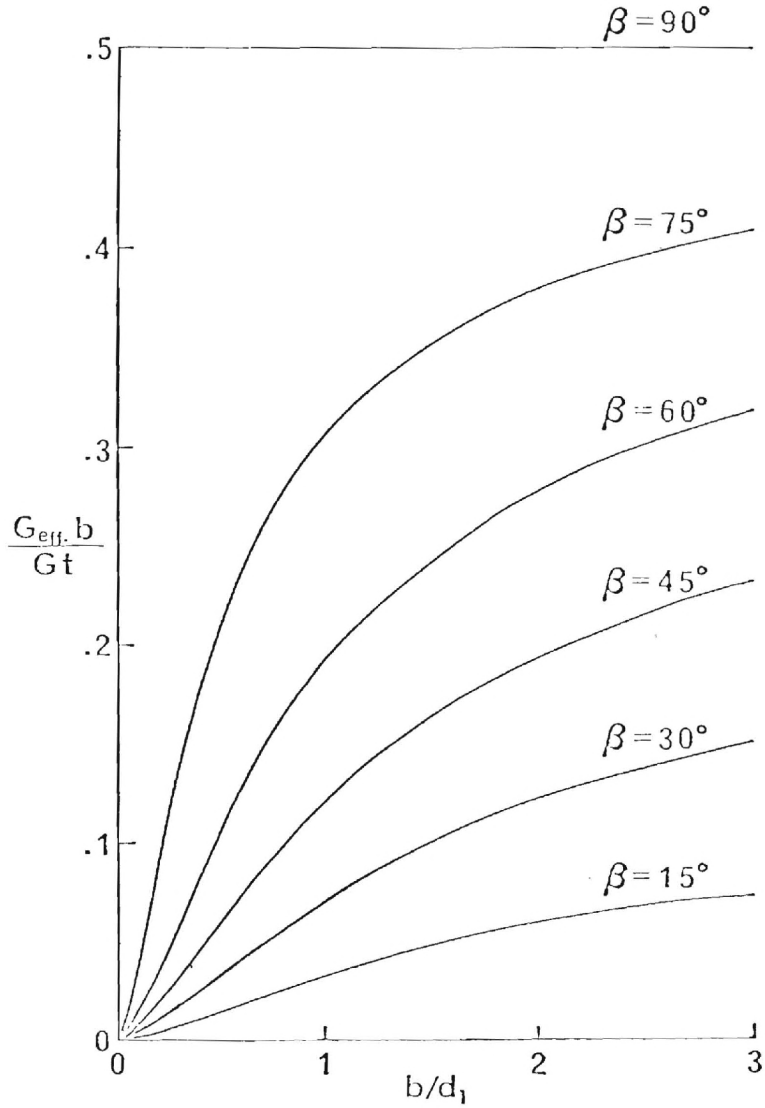

Fig. 4: Nondimensional Effective Shear Modulus Versus b/d_1

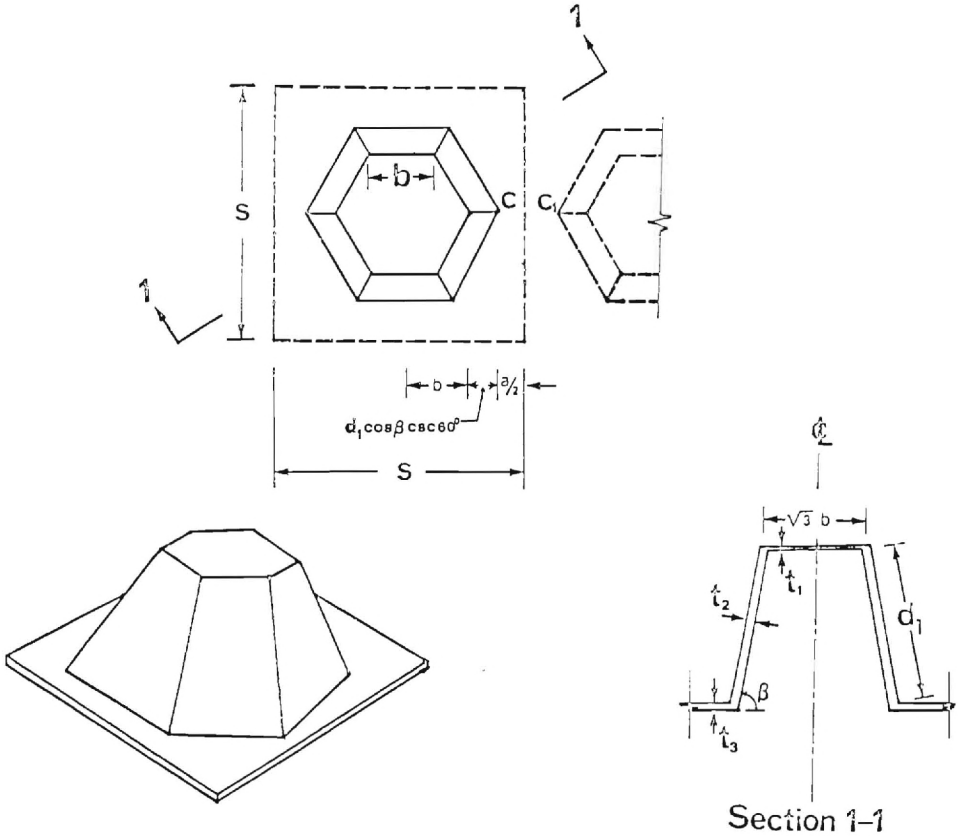

Fig. 5: Unit Projection

where V is the assumed volume for each projection to be responsible in the core structure, i.e.,

$$V = s^2 d_1 \sin \beta \tag{27}$$

Substituting W from Eq. (24) and V from Eq. (27) into Eq. (26), then one has

$$\frac{\rho_c}{\rho} = \frac{V_m}{s^2 d_1 \sin \beta} \tag{28}$$

As mentioned earlier, a parameter $m = a/2b$, is used to examine the spacing effect between two neighboring projections. Using m, one can write s as

$$s = 2[(1 + m)\, b + d_1 \cos \beta \csc 60^\circ] \tag{29}$$

For illustration purpose, the thicknesses t_1, t_2 and t_3 are assumed to be the same in the remaining investigation. Substituting Eq. (29) into Eqs. (25) and (28), then one obtains

$$\frac{\rho_c}{t\rho} = \frac{N}{D} \tag{30}$$

where $N = d_1^2 (A_1 + A_2 \cos \beta + A_3 \cos^2 \beta)$ (31a)

$$D = \frac{16}{3} d_1^2 (A_4 + A_5 \cos \beta + \cos^2 \beta)\, d_1 \sin \beta \tag{31b}$$

$$A_1 = 4(1 + m)^2 \left(\frac{b}{d_1}\right)^2 + 6\left(\frac{b}{d_1}\right) \tag{31c}$$

$$A_2 = 2\sqrt{3} + \left[\frac{16}{\sqrt{3}} (1 + m) - 6\right] (b/d_1) \tag{31d}$$

$$A_3 = \frac{16}{3} - 2\sqrt{3} \tag{31e}$$

$$A_4 = \frac{3}{4}(1 + m)^2 (b/d_1)^2 + \sqrt{3}(1 + m)(b/d_1) \tag{31f}$$

and

$$A_5 = \sqrt{3}(1 + m)(b/d_1) \tag{31g}$$

Setting the first derivative of ρ_c with respect to β equal to zero and after

collecting the terms, one has the following fifth degree algebraic equation

$$B_1 \cos^5 \beta + B_2 \cos^4 \beta + B_3 \cos^3\beta + B_4 \cos^2\beta + B_5 \cos \beta + B_6 = 0 \tag{32}$$

where B_i's are related to A_i's in the following way:

$$\begin{aligned} B_1 &= A_3 \\ B_2 &= 2A_2 \\ B_3 &= 3A_1 + A_2A_5 - A_3A_4 \\ B_4 &= -2A_1 + A_1A_4 + 2A_3A_4 \\ B_5 &= -2A_1 + A_1A_4 + 2A_3A_4 \end{aligned} \tag{33}$$

and

$$B_6 = A_2A_4 - A_1A_5$$

In order to solve Eq. (32), a range of values of b/d_1 and m is first assumed. The five roots of Eq. (32) are then solved by a computer subroutine. In the process, it should be noted that values of a cosine function must lie between -1 and +1. Consequently, any complex roots or real roots with a value outside the above range have to be excluded from the solution. Finally, only values of β no greater than $\pi/2$ are kept as the solution to this problem. The reason for doing so in the last step is that as β becomes greater than $\pi/2$, the equivalent core density ρ_c will tend to approach the core material density ρ. Also, an overlapping of two neighboring projections will occur.

Figures 6, 7, and 8 show the relation between the nondimensional core density versus the inclination angle β for three commonly adopted values of parameter m, i.e., m = 0.5, 0.75, and 1.0 respectively.

DISCUSSION AND CONCLUSIONS

Numerical results presented in this paper, reveal certain interesting phe-

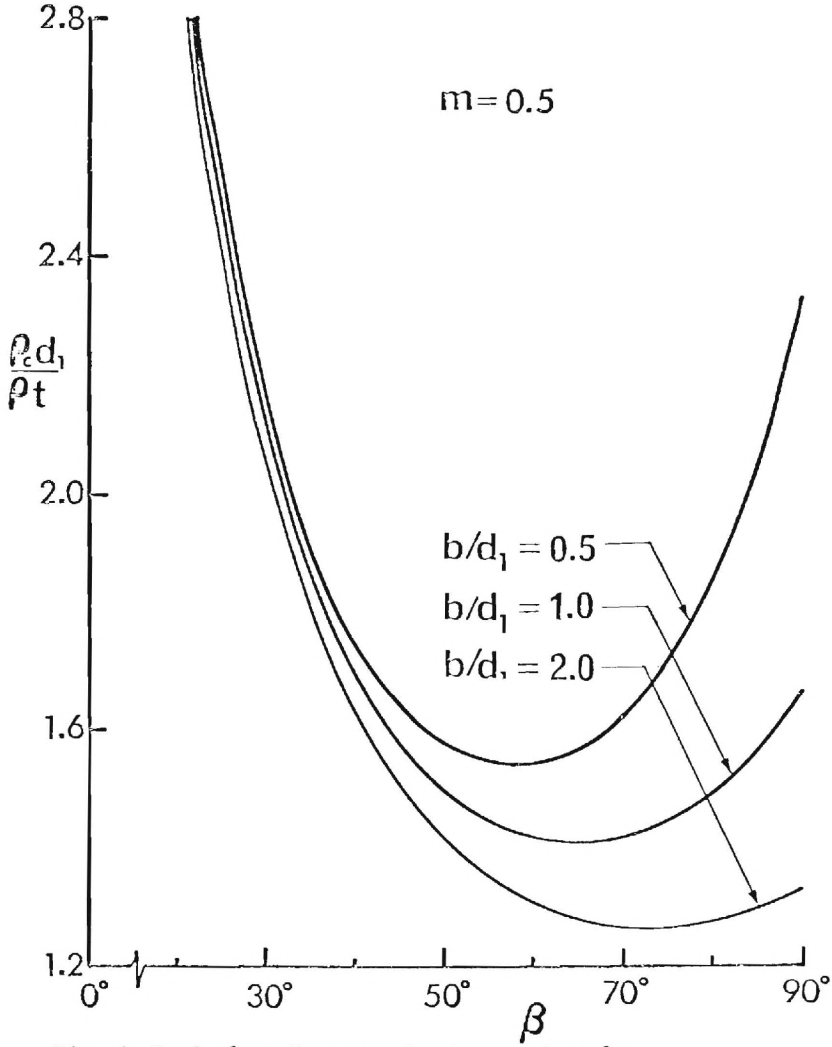

Fig. 6: Equivalent Core Density Versus β-angle

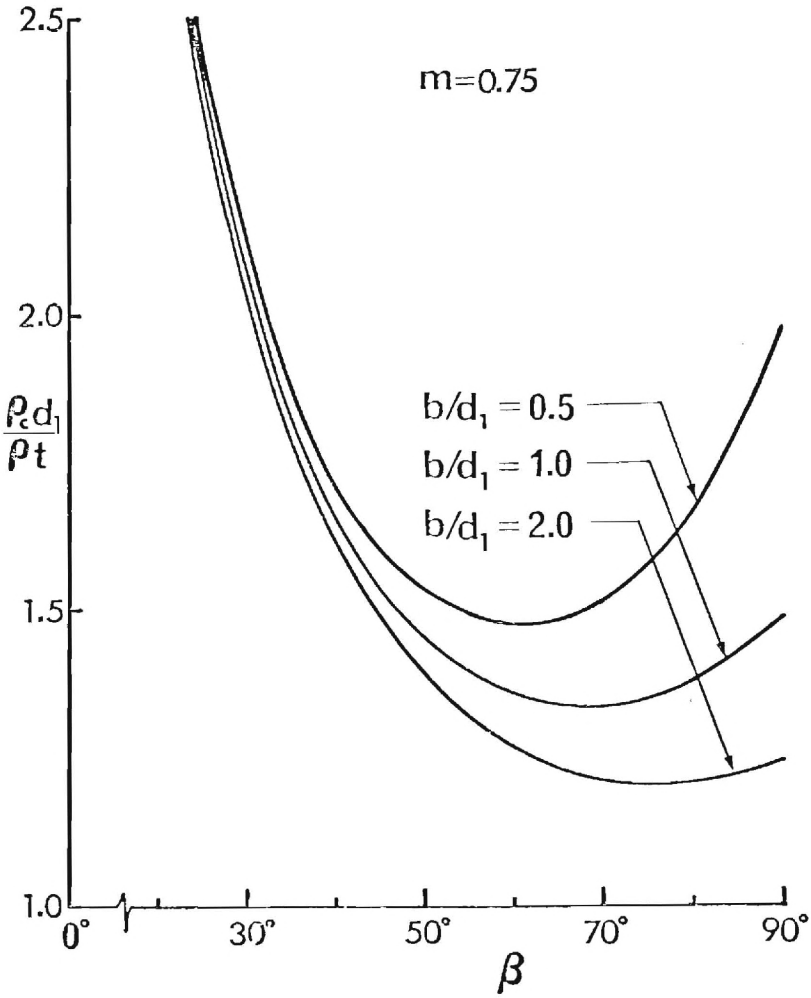

Fig. 7: Equivalent Core Density versus β-angle

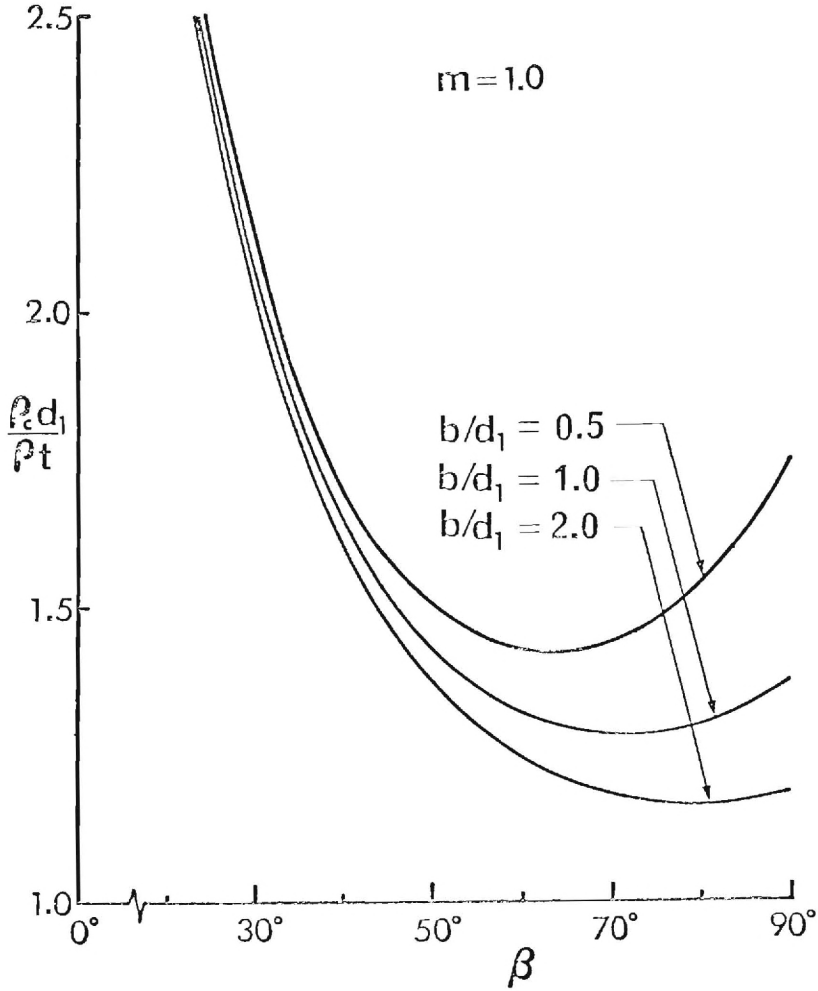

Fig. 8: Equivalent Core Density versus β-angle

nomena for the investigation carried out here. Figure 4 provides the relation between the nondimensional shear modulus of the core versus b/d_1 for different values of β. It is noted here that the effective shear modulus increases as b/d_1 increases. Also true is the fact that it gets higher and higher as β approaches to a right angle. Limitations set up on $b/d_1 = 3$ and $\beta = \pi/2$ are due to practical manufacturing reasons. In the least weight analysis, Figs. 6, 7 and 8 show that the minimum nondimensional density for each b/d_1 is given by the lowest point on that curve. As b/d_1 increases, the value of angle β for the lowest point on each curve also increases. For the case $m = 0.5$, the value of β associated with the lowest points increases approximately from 58° to 75°. As β approaches $\pi/2$, the values of nondimensional core density become well separated and highly dependent on the value of b/d_1. On the other hand, the core density seems to be independent of b/d_1 for $\beta \lesssim 30^\circ$. The curves shown in Fig. 6 tend to merge together at the left end. For other values of m such as shown in Figs. 7 and 8, the general pattern and observation also hold except that the lowest points are gradually lowered. In other words, a lighter core is achieved.

Other shapes of unit projections such as truncated hollow cones, concave or convex, are also being studied. Results will be reported at a later time.

ACKNOWLEDGMENT

This research is supported by a National Science Foundation Grant, No. ENG 75-17968.

REFERENCES

1. Allen, H.G., "Analysis and Design of Structural Sandwich Panels", Pergamon Press, 1969.

2. Chang, C. C. and I. K. Ebcioglu, "Effect of Cell Geometry on the Shear Modulus and on Density of Sandwich Panel Cores", Journal of Basic Engineering, American Society of Mechanical Engineers, pp. 313-518, December 1961.

3. Fletcher, R., "Mathematical-Programming Methods--A Critical Review", Chapter 5, Optimum Structural Design, Edited by R. H. Gallagher and O. C. Zienkiewicz, John Wiley, 1973.

4. Plantema, F. J., "Sandwich Construction", John Wiley, 1966.

5. Powell, M. J. D., "An Efficient Method for Finding the Minimum of a Function of Several Variables Without Calculating Derivatives", The Computer Journal, Vol. 7, No. 2, pp. 155-162, July 1964.

6. Ueng, C. E. S. and T. L. Liu, "Least-weight of Superplastically Formed Cores", Advances in Civil Engineering Through Engineering Mechanics, Proceedings of the 2nd Annual Engineering Mechanics Division Specialty Conference, North Carolina State University, pp. 440-443, May 23-25, 1977.

7. Underwood, E. E., A. Gomez and C. E. S. Ueng, "Design and Fabrication of New Core Configurations for Sandwich Panels", Proceedings of IV Inter-American Conference on Materials Technology, Caracus, Venezuela, pp. 531, June 29-July 4, 1975.

LEAST WEIGHT ANALYSIS OF A NEW SANDWICH CORE

C. E. S. Ueng and T. L. Liu

School of Engineering Science and Mechanics
Georgia Institute of Technology

ABSTRACT

A new, superplastically formed sandwich core is first described and compared with the conventional honeycomb core. Then the least weight analysis of this new core with a hollow, hexagonal pyramid configuration is carried out in this paper. The inclination angle β of the side wall is characterized by a fifth degree polynomial of the cosine of that angle. Graphs for a nondimensional equivalent core density versus β are obtained for different values of m, the ratio between a and 2b.

SYMBOLS

a	:	distance between two neighboring corners along x-direction
b	:	edge length of the top hexagon
d_1	:	length of the inclined wall
m	:	a/2b
s	:	center-to-center distance between two projections
t	:	uniform thickness
t_1, t_2, t_3	:	unequal thicknesses
V	:	material volume
W	:	weight of a unit projection
β	:	inclination angle of the wall
ρ	:	material density
ρ_c	:	equivalent core density
$A_1 \ldots A_5$	:	coefficients
$B_1 \ldots B_6$	:	coefficients
V^1	:	volume for each projection to be responsible in the core structure

INTRODUCTION

Ever since its first successful application in the British "Mosquito" aircraft during World War II, the sandwich construction concept has become a well accepted structural form in our modern day world. In recent years,

application of sandwich structures are no longer limited within the aerospace industry but extended to other segments of engineering, such as housing construction, transportation, packaging, noise suppression purposes and others.

Perhaps the greatest advantage of sandwich structure is that it can provide a very high stiffness-weight ratio due to the low density core property. This feature provides special attraction for the purpose to have a lightweight structure, e.g., in an aircraft or space vehicle design where the structural weight is one of the most critical factors. On the other hand, structures built on the ground where seismic motion is active, a lighter structure can often lead to a better design. This is due to the fact that a lighter structure can push the fundamental natural frequency of vibration higher so the peak acceleration shown in a given spectrum curve is surpassed. Consequently, a lower seismic force often results.

Until recently, sandwich core for structural panels has usually been made of aluminum foil in the shape of hexagon with vertical walls ([1] and [2]). The tooling facility for manufacturing this typical core is generally quite expensive. In addition, a second drawback of this traditional configuration is that only a line contact is provided for bonding the core with the facing sheets. If a cross-section of such a structural panel is taken, one often finds that excessive adhesive material is leftover around the bonding or contact lines. The weight of such unused glue material does not contribute to the gaining of stiffness but reduce the payload. Strangely enough, nothing has been done on how to eliminate these drawbacks. At least, little is reported in the technical literature. Perhaps the difficulty involved is that in order to improve the bonding by providing a larger contact area, an even more sophisticated tooling facility would be necessary. This may have blocked any attempt to overcome this problem.

An almost completely new idea was conceived recently by adopting the superplastic materials (Al-78% Zn, Ti-6% Al-4% V, etc.) and vacuum-forming techniques for manufacturing sandwich core which completely eliminates the above drawbacks. This has been successfully carried out at Georgia Tech [3]. In this new process, a superplastic sheet is first heated up in a specially designed furnace, then allowing it to collapse gently onto a die having the desired geometry. The shape of the core is only limited by the configuration of the die itself. Given a special requirement, the shape of the core can be optimized to fulfill that particular condition. References [3] and [4] demostrated these.

In this paper, a core configuration of hollow, truncated pyramid of hexagonal top is considered (see Figs. 1 and 2). An analysis is carried out to determine the minimum density of the core with respect to the inclination angle β of the wall.

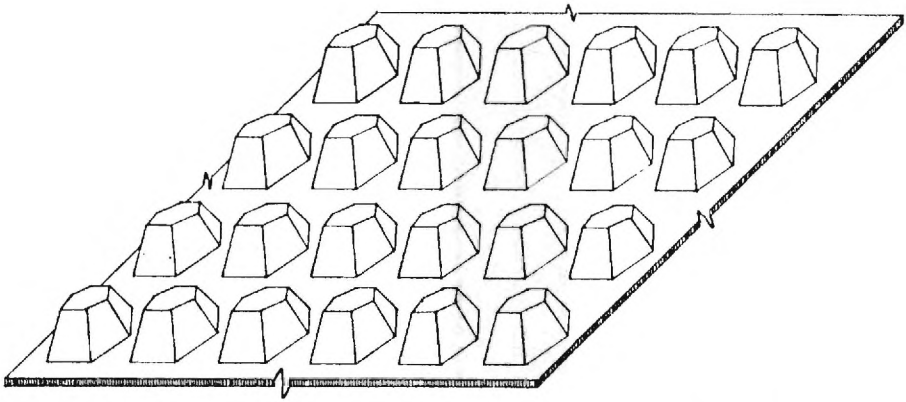

Fig. 1 Sandwich Core of Truncated Hexagonal Pyramid Shape

ANALYSIS

Consider a hollow, truncated, hexagonal pyramid as shown in Fig. 2. The problem investigated here is to seek the minimum equivalent core density with respect to the inclination angle β for a given ρ, t, b/d_1 and the ratio m. In order to include the effect of spacing between two neighboring projections, the distance along x-direction from one corner to the next neighboring corner C_1 is assumed to be arbitrary. Assuming that the center-to-center distance along y-direction is also s, then according to Fig. 2, the weight of a unit projection or cell may be written as

$$W = \rho V_m \tag{1}$$

where V_m is the material volume, i.e.,

$$V_m = \frac{3\sqrt{3}}{2} b^2 t_1 + 6(b+d_1 \cos\beta \cot 60^\circ) d_1 t_2$$

$$+ \left[s^2 - \frac{3\sqrt{3}}{2} (b+2d_1 \cos\beta \cot 60^\circ)^2 \right] t_3 \tag{2}$$

Introducing the equivalent core density ρ_c and letting

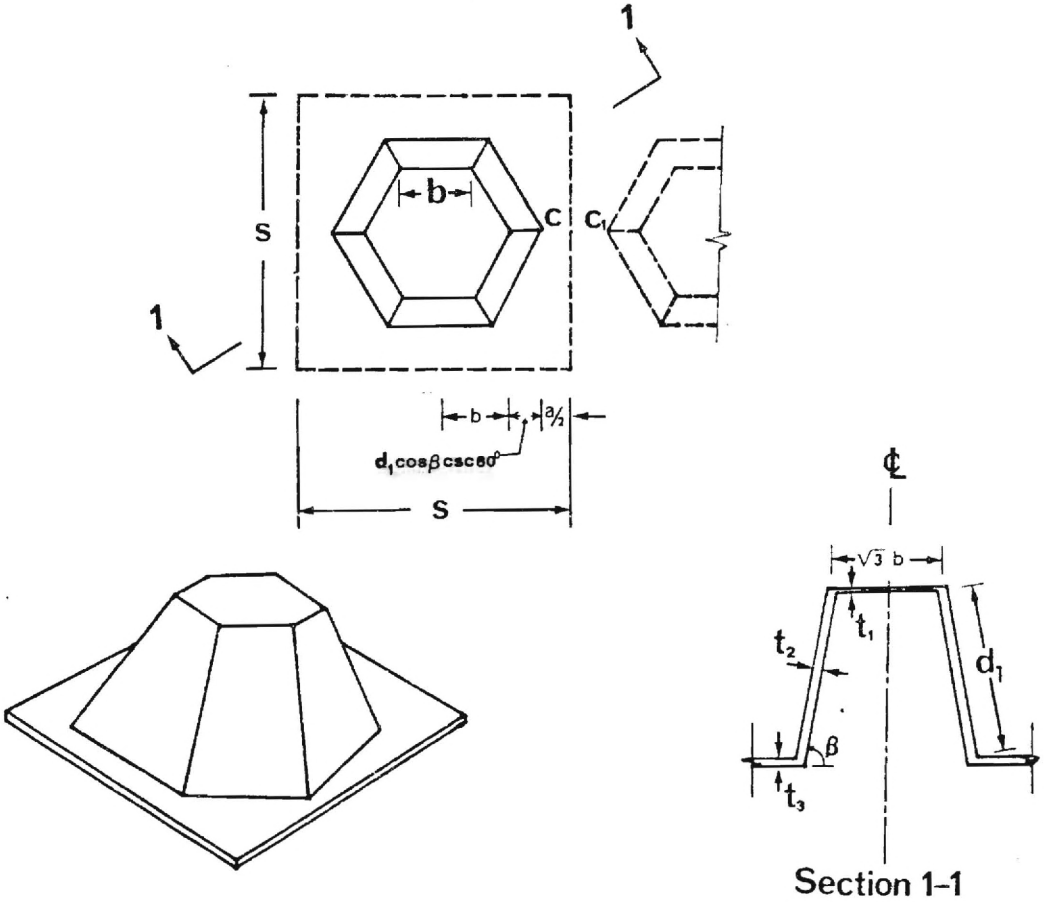

Fig. 2 Unit Projection

$$W = \rho_c V \tag{3}$$

where V is the assumed volume for each projection to be responsible in the core structure, i.e.,

$$V = s^2 d_1 \sin \beta \tag{4}$$

Substituting W from eq. (1) and V from eq. (4) into eq. (3), then one has

$$\frac{\rho_c}{\rho} = \frac{V_m}{s^2 d_1 \sin \beta} \tag{5}$$

In order to facilitate the examination of the spacing effect, a relation between a and b is assumed, i.e.,

$$a = 2mb \tag{6}$$

where m is a parameter to be assigned for different numerical values. Using eq. (6), then s can be written in the following form,

$$s = 2[(1+m)\ b+d_1 \cos \beta \csc 60^o] \tag{7}$$

Due to the limitation of the length of this paper, the thicknesses t_1, t_2 and t_3 are assumed to be the same in the remaining investigation. Substituting eq.(7) into eqs. (2) and (5), then one obtains

$$\frac{\rho_c}{t\rho} = \frac{N}{D} \tag{8}$$

where after simplification the numerator N on the right hand side is

$$N = d_1^2(A_1+A_2 \cos \beta + A_3 \cos^2\beta) \tag{9a}$$

and the denominator D is

$$D = \frac{16}{3} d_1^2(A_4+A_5 \cos \beta + \cos^2\beta)\ d_1 \sin \beta \tag{9b}$$

Note that in eqs. (9a) and (9b), A_1, A_2, . . . , A_5 are defined as follows:

$$\begin{aligned} A_1 &= 4(1 + m)^2(\frac{b}{d_1})^2 + 6(\frac{b}{d_1}) \\ A_2 &= 2\sqrt{3} + \left[\frac{16}{\sqrt{3}} (1 + m) - 6\right](\frac{b}{d_1}) \\ A_3 &= \frac{16}{3} - 2\sqrt{3} \\ A_4 &= \frac{3}{4} (1 + m)^2(\frac{b}{d_1})^2 + \sqrt{3} (1 + m) (\frac{b}{d_1}) \end{aligned} \tag{10}$$

and

$$A_5 = \sqrt{3}\ (1 + m)\ (\frac{b}{d_1})$$

In order to have a minimum value of ρ_c, the first derivative of ρ_c with respect to β must vanish. After collecting the terms, one obtains the following fifth degree algebraic equation

$$B_1 \cos^5\beta + B_2 \cos^4\beta + B_3 \cos^3\beta + B_4 \cos^2\beta + B_5 \cos \beta + B_6 = 0 \qquad (11)$$

where B_i's are related to A_i's in the following fashion:

$$\begin{aligned} B_1 &= A_3 \\ B_2 &= 2A_2 \\ B_3 &= 3A_1 + A_2A_5 - A_3A_4 \\ B_4 &= -2A_1 + A_1A_4 + 2A_3A_4 \\ B_5 &= -2A_1 + A_1A_4 + 2A_3A_4 \end{aligned} \qquad (12)$$

and

$$B_6 = A_2A_4 - A_1A_5$$

By assuming a range of b/d_1 and m, then one can solve for the roots of eq. (11). The steps for obtaining numerical solution are as follows:

1. Obtain the five roots of eq. (11) by a computer subroutine;
2. Due to the fact that values of a cosine function must lie between -1 and +1, any complex roots, or real roots with a value outside the above range are therefore eliminated from the solution;
3. Obtain the values of β according to step (2); and
4. Only values of β no greater than 90° are kept as the solution to this problem.

The reason for step (4) is that as β becomes greater than 90°, the equivalent core density ρ_c will tend to approach the core material density ρ. From manufacturing point of view, it is undesirable to have an angle β greater than 90° where an overlapping of two neighboring projections may happen.

RESULTS AND DISCUSSIONS

Figures 3, 4 and 5 show the relation between the nondimensional core density versus the inclination angle β for three commonly adopted values of

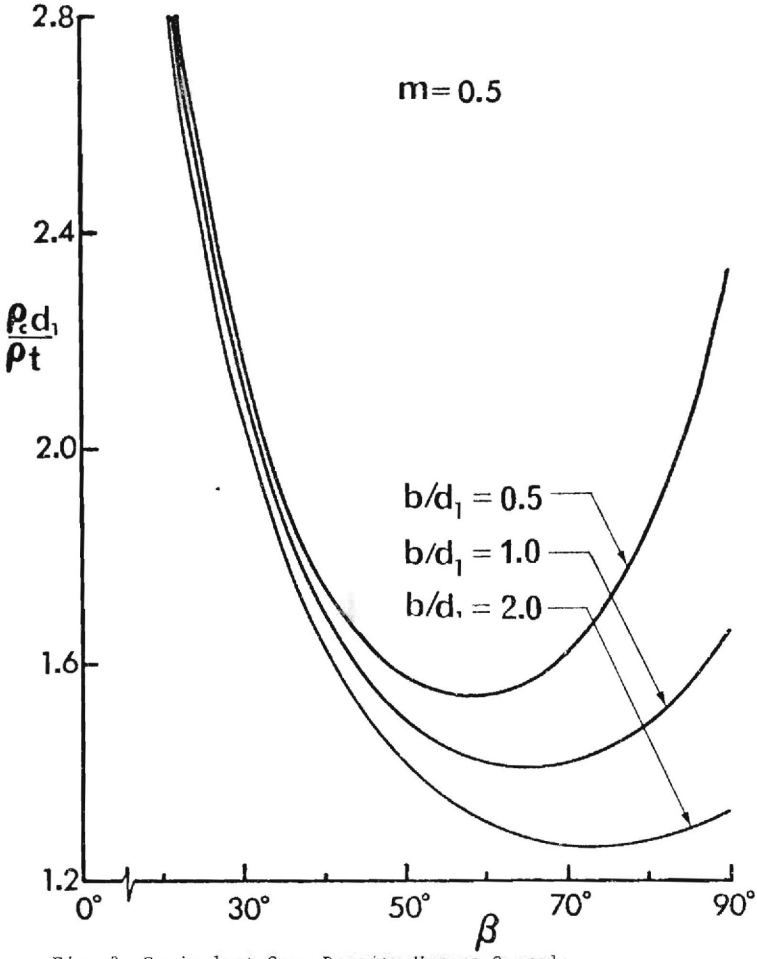

Fig. 3 Equivalent Core Density Versus β-angle

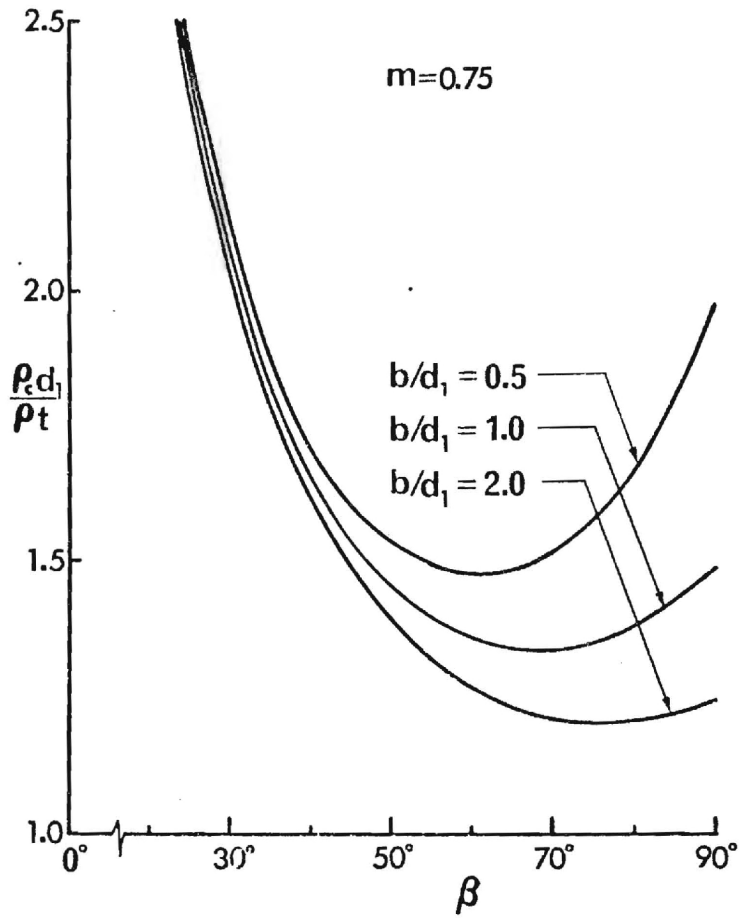

Fig. 4 Equivalent Core Density versus β-angle

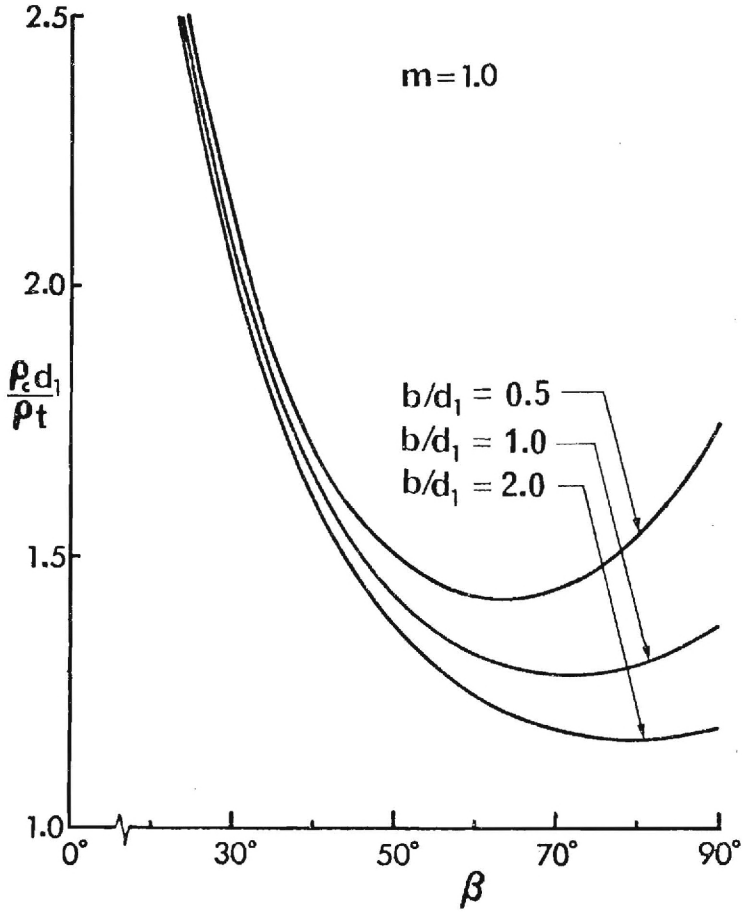

Fig. 5 Equivalent Core Density versus β-angle

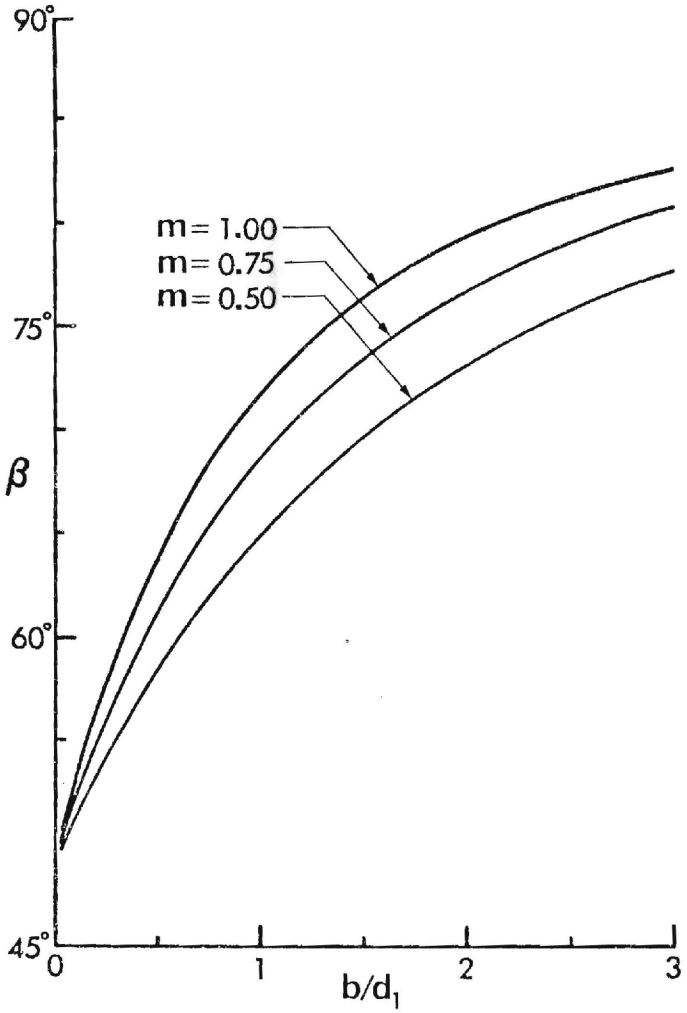

Fig. 6 Minimum Density Curve: β versus b/d_1

parameter m, i.e., m = 0.5, 0.75 and 1.0, respectively. For a given value of m. The minimum nondimensional density for each b/d_1 is given by the lowest point on that curve. As b/d_1 increases, the value of angle β for the lowest point on each curve also increases. For the case m = 0.5, the value of β associated with the lowest points increases approximately from 58° to 75°. As β approaches to 90°, the values of nondimensional core density become well separated and highly dependent on the value of b/d_1. On the other hand, for $\beta \leq 30^o$, the core density seems to be independent of b/d_1. The curves shown in Fig. 3 tend to merge together at the left end. For other values of m such as shown in Figs. 4 and 5, the general pattern and observation also hold except that the lowest points are gradually shifted to the right. Furthermore, the minimum points are also gradually lowered, which means that a lighter core is achieved.

Figure 6 represents the minimum density curves for a wide range of values of b/d_1, from a case slightly greater than zero up to a value of three. Any point on these three curves offers a minimum density for a particular combination of β and b/d_1.

REFERENCES

[1] Plantema, F. J., Sandwich Construction, John Wiley, 1966.

[2] Allen, H. G., Analysis and Design of Structural Sandwich Panels, Pergamon Press, 1969.

[3] Underwood, E. E., Gomez, A. and Ueng, C. E. S., "Design and Fabrication of New Core Configuration for Sandwich Panels", Proceedings of IV Inter-American Conference on Materials Technology, Caracus, Venezuela, June 29-July 4, 1975, p. 531.

[4] Ueng, C. E. S. and Liu, T. L., "Least Weight of Superplastically Formed Cores", 2nd Annual ASCE Engineering Mechanics Specialty Conference, North Carolina State University, Raleigh, N.C., May 23-25, 1977 (accepted).

[5] Ueng, C. E. S. and Liu, T. L., "Optimization of a New Lightweight Sandwich Core", International Conference on Lightweight Shell and Spatial Structures for Normal and Seismic Zones, International Association of Shell and Spatial Structures, September 13-16, 1977, Alma-Ata, U.S.S.R. (accepted).

ACKNOWLEDGEMENT

This research is supported by a National Science Foundation Grant No. ENG 75-17968.

FRACTURE AND FATIGUE RESEARCH LABORATORY
GEORGIA INSTITUTE OF TECHNOLOGY
ATLANTA, GEORGIA 30332 (404) 894-2880

E-19-645

November 29, 1978

Mr. Charles A. Babendreier
Program Director
Structural, Materials and
Geotechnical Engineering
Engineering Division, Room 418A
National Science Foundation
Washington, D.C. 20550

Dear Mr. Babendreier:

This report summarizes the work done on NSF Grant No. ENG-75-17968, entitled, "Superplastically-Formed Cores for Structural Sandwich Panels," during the entire grant period from 12 March 1976 to 31 August 1978.

We believe the work accomplished to date represents a significant technical contribution, and hope that you concur. Now that the analytical and experimental procedures are progressing smoothly, we feel that a continuation of this effort will yield additional worthwhile results at an accelerated rate.

It is hoped that this report is satisfactory in every respect. If any further information is desired, please let us know.

Very truly yours,

E. E. Underwood
Principal Research Engineer
Fracture and Fatigue Research
Laboratory
School of Chemical Engineering

C. E. S. Ueng
Professor
School of Engineering Science
and Mechanics

29 Nov 78

SUPERPLASTICALLY-FORMED CORES FOR STRUCTURAL SANDWICH PANELS

FINAL REPORT

by

E. E. Underwood and C. E. S. Ueng
Georgia Institute of Technology

SUMMARY

The primary goal of this combined analytical and experimental research program is to produce more efficient types of cores for sandwich panels. Additional objectives are to provide engineering solutions for the determination of structural parameters, and to develop a predictive capability for optimized core configurations, depending on the load environment.

The experimental program has been designed to test analytical predictions for specific core configurations. Superplastic Zn-22% Al sheet alloy is used to make cores consisting of projections with various geometries and locational symmetry. The mechanical properties of the alloy are determined, as well as the shear properties of the various core configurations, and are compared with analytical predictions.

In the analytical phase of the program, the unit displacement and unit load methods are employed to establish the upper and lower bounds of the effective core shear modulus. The least core density is also solved as a function of projection wall inclination angle. The shear modulus of the core subjected to a number of equality and inequality constraints is maximized in terms of projection shape.

The results obtained during the two-year grant period were presented and discussed at six technical meetings, and nine papers were submitted and/or published in technical journals and proceedings.

RESEARCH ACTIVITY AND RESULTS

The results of research work performed during this report period have been recorded in the 12-month summaries submitted to Mr. Charles A. Babendreier, Program Director, dated 11 Mar 77, and 10 Mar 78, and in the technical publications (Nos. 1 to 9) listed at the end of this report. Full details of the technical approach and accomplishments are contained in these publications, and copies thereof are appended to this report.

The significant results of the analytical work are abstracted and summarized below.

A core configuration with 4-sided truncated pyramids in a square array was considered in Ref. (1). The sheet thickness was assumed constant over the entire projection. For a given material density, sheet thickness, and projection geometry, the minimum density of the core was determined with respect to the side wall inclination angle β of the projections. The results are summarized in Figure 2 of Ref. (1), indicating a minimum density function at β angles between about 50 and 70° depending on the projection dimensions. A least weight analysis of a core with truncated hexagonal projections in a square array was carried out in Ref. (4). The methodology employed was similar to that developed in Ref. (1).

The same type of core configuration was also studied in Ref. (2). The shape of the projections was optimized, for a given constant weight or volume, in order to obtain the maximum shear modulus of the core. The problem was formulated as a structural optimization problem subjected to equality and inequality constraints. Penalty functions and Powell's technique were used. It was found that the shear modulus of the core increases with the value of β, as shown in Fig. 4.

Procedures for the analytical determination of shear modulus of cores with 4-sided pyramids in a square array were reported in Ref. (6). Upper and lower bound solutions were obtained, and are summarized in Figs. 7-10. Computer graphic results were also presented. A similar analytical study was also carried out with cores composed of hexagonal projections. Results are summarized in Figs. 5 and 6. Experimental shear test results compare favorably with the analytically determined upper and lower bounds for the shear modulus function.

A study of the shear modulus of a core with truncated cone-shaped projections was undertaken in Ref. (9). Both upper and lower bound solutions were obtained for the core shear modulus.

The primary function of the experimental portion of this program is to provide actual test data that can confirm or deny the analytical predictions. To this end, a new high-temperature furnace was designed and constructed for the superplastic forming of cores with the desired configurations. Initial work was performed with the well-known Al-78% Zn superplastic alloy; however, furnace capabilities will also permit titanium- and iron-base superplastic alloys to be studied. The important benefits conferred by the use of superplastic sheet material are that die construction is greatly simplified, and that a practically unlimited number of core geometries can be readily produced.

The bulk of the experimental results were obtained from cores consisting of truncated pyramidal projections with either 4- or 6-sides, and located in a square array. These basic core configurations with different projection geometries were tested and analyzed, and the results compared with analytical predictions. Both basic bulk alloy mechanical properties, and

the effective shear properties of the various cores were obtained. The details of this work are contained in the forthcoming Master's thesis prepared by Mr. Roy E. Crooks.

Typical experimental results are seen for cores with 4- and 6-sided projections, tested in shear according to ASTM standard methods. The data obtained in one direction ($\phi = 0°$) are given in the following table.

Projection Height, mm	Effective Shear Modulus, G_{eff}, psi	
	6-sided projections	4-sided projections
12	2350	2085
	2165	2170
6	2055	1930

Here we see that the values of G_{eff} for 6-sided projections are about 6 percent higher than for the 4-sided projections, regardless of projection height. The values of G_{eff} for both types of cores increase about 10 percent when the projection height is doubled.

An idea of directionality effects is afforded by data for cores with hexagonal projections (tested at $\phi = 0°$ and $\phi = 90°$). $G_{eff} = 2055$ psi at $\phi = 0°$, while $G_{eff} = 2610$ psi at $\phi = 90°$, a 27 percent increase. These experimental values show good agreement with upper-lower bound curves of shear modulus obtained analytically.

The results obtained during this grant period show good progress toward the original goals and objectives. Further work should lead to better results as optimization procedures take additional factors into account. For example, a more efficient wall thickness distribution in the projections offers an immediate weight reduction without loss of strength. The partially-completed stress analysis using the finite element

approach also looks promising, and may lead to increases in core and sandwich properties. The momentum achieved at this point means that a continuation of this effort has a high probability of further payoffs in both scientific and engineering areas.

ACCOMPLISHMENTS

The most significant result from this research program is the methodology established for the design of more efficient core configurations. Not only does the analysis encompass simple to more complex cores, but the results are confirmed independently through direct experimental tests. The use of superplastic sheet materials simplifies the otherwise formidable problem of die design and construction, and provides an almost unlimited source of different core configurations, obtained readily and inexpensively.

Other accomplishments worth noting are that the analytical procedures developed here provide engineering solutions for the determination of structural parameters, and also enable predictions of optimum core configurations for specific load enviornments.

An indirect but important consideration is the fact that the various reports prepared during this grant, and presented both orally and in printed form, have received widespread acceptance from the technical community, as judged by the comments received.

FUTURE WORK

The following tasks should be continued or undertaken:

1. Stress analysis of core configurations by the finite element method: This problem should be continued, since it is an advanced stage of analysis.

2. Fabrication and testing of cores manufactured from Ti-6Al-4V superplastic sheets: The analytical results obtained earlier indicate that optimized cores of Ti-6-4 should give a shear modulus about two times higher than the conventional aluminum honeycomb based on the same core density. It should prove to be an important structural material for lightweight designs.
3. Optimization and selection of the best core configurations: Based on the same density constraint conditions, we wish to establish procedures for the selection of core shape and symmetry that maximize the shear modulus of the core.

PERSONNEL AND TIME CHARGED

The following persons have been involved in this program during the grant period. The time charged to the project is as indicated below:

Both Drs. E. E. Underwood and C. E. S. Ueng, Co-Principal Investigators, have devoted approximately 1/3-time during the academic quarters and full-time for two months during the summer quarters to this project. The portions over the 1/4-time allocation were paid from other funds, except for 2-months at 1/8-time for Dr. Underwood.

Mr. T. L. Liu, Graduate Research Assistant and Ph.D. candidate in the School of Engineering Science and Mechanics, has been working on this project throughout the entire period. He will use part of the research results in his thesis. His salary (1/3-time) has been paid from other sources.

Mr. Roy E. Crooks, graduate student and candidate for a Metallurgy Master's degree, received 1/3-time support from this grant during the last two years.

Mr. T. J. Maa, Graduate Research Assistant and M.S. candidate in the School of Engineering Science and Mechanics, started his work on this project in January 1978. His salary (1/3-time) for two academic quarters was paid from this project.

PROFESSIONAL MEETINGS ATTENDED

The following professional meetings were attended, and a paper was presented at each of the conferences:

1. 2nd Annual ASCE Engineering Mechanics Specialty Conference, North Carolina State University, Raleigh, NC, May 23-25, 1977.
2. International Conference on Lightweight Shell and Space Structures for Normal and Seismic Zones, Alma-Ata, USSR, September 13-16, 1977.
3. 14th Annual Meeting of the Society of Engineering Science, Lehigh University, Bethlehem, PA, November 14-16, 1977.
4. 8th U.S. National Congress of Applied Mechanics, June 26-30, 1978. University of California in Los Angeles.
5. Symposium on Future Trends in Computerized Structural Analysis and Synthesis, October 30-November 1, 1978, Washington, D.C.
6. 5th Inter-American Conference on Materials Technology, November 5-10, 1978, São Paulo, Brazil.

PUBLICATIONS

1. Ueng, C. E. S. and Liu, T. L., "Least Weight of Superplastically Formed Cores," Proceedings of the 2nd Annual ASCE Engineering Mechanics Conference, North Carolina State University, Raleigh, NC, May 23-25, 1977, pp. 440-443.
2. Ueng, C. E. S. and Liu, T. L., "Optimization of a New Lightweight Sandwich Core," Proceedings of the Inter. Conf. on Lightweight Shell

and Space Structures for Normal and Seismic Zones, Alma-Ata, USSR, Sept. 13-16, 1977, Vol. 2, pp. 375-383.

3. Ueng, C. E. S., "Superplastic Forming of New Sandwich Cores," ASCE Fall Convention and Exhibit, San Francisco, CA, October 17-21, 1977, Preprint 3029. (This paper also appeared later in the ASCE Journal of Transportation, July 1978, pp. 437-447).

4. Ueng, C. E. S. and Liu, T. L., "Least Weight Analysis of a New Sandwich Core," Proceedings of the 14th Annual Meeting of the Society of Engineering Science, Lehigh University, Bethlehem, PA, November 14-16, 1977, pp. 273-283.

5. Ueng, C. E. S., "Superplastically Formed Sandwich Cores for Structural Panels," 8th U.S. National Congress of Applied Mechanics, June 26-30, 1978, University of California in Los Angeles, p. 64.

6. Ueng, C. E. S., Underwood, E. E. and Liu, T. L., "Shear Modulus of Superplastically Formed Sandwich Cores," Proceedings of Symposium on Future Trends in Computerized Structural Analysis and Synthesis, Pergamon Press, edited by A. K. Noor and H. G. McComb, Jr. October 30-November 1, 1978, Washington, D.C., pp. 393-397. (Will also appear in the Inter. J. of Computers and Structures, 1979).

7. Ueng, C. E. S., Liu, T. L., Crooks, R. E., and Underwood, E. E., "Fabrication, Testing and Analysis of New Design Cores for Structural Sandwich Panels," Proceedings of the 5th Inter-American Conference on Materials Technology, November 5-10, 1978, São Paulo, Brazil, pp. 531-535.

8. Ueng, C. E. S., Underwood, E. E., and Liu, T. L., "Shear Modulus of Hexagonal Shape Sandwich Core Made of Superplastic Sheets," submitted to the 20th Annual Conference on Structures, Structural Dynamics and Materials, St. Louis, April, 1979.

9. Ueng, C. E. S., "Shear Modulus of Hollow Truncated Cone-Shaped Sandwich Cores,: submitted to the 7th Canadian Congress of Applied Mechanics, Sherbrooke, Quebec, Canada, May 1979.

E-23-618

ENGINEERING COLLEGE

GEORGIA INSTITUTE OF TECHNOLOGY

SCHOOL OF ENGINEERING SCIENCE
AND MECHANICS

225 NORTH AVENUE, N.W.
ATLANTA, GEORGIA 30332

March 11, 1977

Mr. Charles A. Babendreier
Program Director
Structural, Materials and Geotechnical Engineering
Engineering Division, Room 418A
National Science Foundation
Washington, D. C. 20550

Dear Mr. Babendreier:

This report covers the work done on NSF Grant No. ENG-75-17968, entitled, "Superplastically-Formed Cores for Structural Sandwich Panels", during the 12 month period from 12 March 1976 to 11 March 1977.

As you can see, there are essentially two main subdivisions in the report: the analytical section (prepared by Dr. Ueng) and the experimental section (prepared by Dr. Underwood). Throughout the year, however, the work has been performed in close cooperation as originally planned in the research proposal.

We hope that this report is satisfactory in every respect. If any questions occur to you, please let us know.

Very truly yours,

E. E. Underwood
Principal Research Engineer
Metallurgy Program
School of Chemical Engineering

C. E. S. Ueng, Associate Professor
School of Engineering Science and Mechanics

/sam

enclosure

✓ c.c.: Office of Res. Administration, Campus

SUMMARY

"Superplastically-Formed Cores for Structural Sandwich Panels"

The primary goal of this combined analytical and experimental research program is to produce more efficient types of cores for sandwich panels. The new cores are made from superplastic Zn-22% Al alloy sheet and are designed to have more advantageous geometrical configurations than the conventional hexagonal-cell honeycomb core material.

The analytical portion of this program has focused initially on a simple core configuration, with 4-sided truncated pyramidal projections arrayed in cubic symmetry.

Two problems are investigated: (1) the least density of core versus the wall inclination angle, and (2) the optimum shape of projection for maximum shear modulus of the core, for a given constant weight or volume.

Results are presented in the form of a family of curves that yield the minimum core density as a function of projection wall angle and shape. Another family of curves predict the optimum wall angle and projection shape to achieve a selected effective shear modulus.

The experimental work has consisted primarily of preliminary construction and testing of simple core configurations. A new, improved capability furnace has been designed and constructed for forming cores superplastically from sheets of Zn-22% Al, as well as Titanium- or iron-alloys. Special dies are designed to produce core configurations that can verify or modify analytical predictions.

RESEARCH ACTIVITY AND RESULTS

Analytical Work

The analytical phase during this first twelve month period has followed quite closely to the outline presented in the research proposal. The project has profited greatly from the close interaction between the analytical and experimental parts of the research program.

During this period, the analytical work has been devoted mainly to the determination of (1) the geometric least-weight configuration of the core, and (2) the optimization (maximization) of the shear modulus of the core. The results obtained on these two topics were written up and submitted to two specialty conferences, as follows:

(1) "Least Weight Design of Superplastically-Formed Sandwich Cores", Second Annual ASCE Engineering Mechanics Specialty Conference, North Carolina State University, 23-25 May 1977.

(2) "Optimization of a New Lightweight Sandwich Core", International Conference on Lightweight Shell and Spatial Structures for Normal and Seismic Zones, International Association of Shell and Spatial Structures, Alma-Ata, U.S.S.R., 13-16 Sept. 1977.

Copies of these papers are attached to this report. Both papers have been accepted for presentation and will be included in the conference proceedings. It should be noted, however, that the final version of the first paper listed above will include more up-to-date results.

The IASS International Conference to be held in Alma-Ata, U.S.S.R., offers a unique opportunity to meet and talk with Russian scientists about their work on lightweight structures. Complete financial arrangements are yet to be worked out for this trip, but it is hoped that the necessary help will be

forthcoming.

Dr. Ueng has been invited by the Aerospace Division of ASCE to give a paper at the 1977 ASCE Convention, October 17-21 in San Francisco, on "Analysis of Superplastically Formed New Sandwich Cores". He has also been recently recommended to serve as the chairman of a Subcommittee on Composite Structures within the Aerospace Division of ASCE. The official appointment is expected to be made around March 15, 1977.

Future Work:

The plan for the next twelve months will follow essentially the outline stated in the research proposal. Some minor adjustments may be made to achieve more efficiency. The important items are listed as follows:

1. To analyze the case where the thickness of the inclined wall in the core is greater than the top and bottom areas. It is anticipated that this arrangement will further increase the shear modulus of the core.

2. In addition to the four-sided, truncated hollow pyramid, other configurations will also be analyzed, i.e., a truncated hollow hexagonal shape and a truncated hollow conical shape.

3. To seek both the lower and upper bounds of the shear modulus.

4. To obtain stress analysis results for the new core through the use of finite element method.

5. To optimize the core geometry based upon the objective functions of strength to density ratio, stiffness to density ratio, weight distribution between core and facing sheets, and fabrication considerations.

It is expected that results will be achieved at an accelerated pace during the second year.

Experimental Work

Preliminary work on the superplastic forming of cores was performed with the original furnace designed for thin sheets of 78Zn-22 Al and high impact polystyrene. Details are given in the thesis by Gomez, while the broad aspects of the program are described in the publication submitted for presentation at the Fourth Inter-American Conference on Materials Technology (see attached Abstract).

Briefly, studies were made of forming, bonding and testing of cores made from Zn-22% Al alloys. The cores were bonded either to facing sheets or directly to the loading plates with AFEPOXY 2, an adhesive commonly used in sandwich construction.

The mechanical testing of 78Zn-22 Al cores generally followed ASTM specifications. Shear tests in flatwise plane (C273), edgewise compressive strength (C364), and flexure test of flat sandwich constructions (C393) were undertaken.

In general, these preliminary tests were inconclusive because of inadequate bonding techniques. However, the flexure test, done with 4-point bending, gave a satisfactory value of E_c = 630,000 psi. These preliminary results are informative primarily because they point up the areas where special attention is required. Thus, better adhesives, cleaning and bonding techniques are essential and will be addressed in detail when testing new core configurations designed specifically to confirm analytical predictions.

In order to determine the sheet uniformity obtained in these preliminary experiments, cores were cut in several directions and examined edgewise. Typical results are seen in the path between adjacent projection centers. For truncated conical projections, going from the top to the bottom of a projection, the greatest reduction in thickness occurs at the edge of the projection top,

followed by a gradual increase in sheet thickness to the center of the base material between projections. Localized thinning is especially pronounced at corners where sharp changes in direction occur, such as the top edge of the projection. Some rounding of this edge in the die helps to alleviate this situation.

For projections having a uniform wall thickness, an appreciable fraction of the weight of the core is located at the tops and bottoms of projections. This value is of the order of 15 percent, so maximum thinning is desirable at these locations to attain the most efficient weight distribution. Methods for controlling the weight distribution (i.e., thickness) are available for thermoforming sheet processes, and will be utilized.

In order to upgrade the capabilities of the original furnace, a new high-temperature furnace has been designed and constructed. Not only can higher temperatures, pressures and vacuums be obtained, allowing titanium- and iron-alloys to be studied, but also greater flexibility is possible in the choice of dies and forming procedures.

Figure 1(a) shows an overview of the furnace, its supporting A-frame and platform, auxiliary pumps, tank gas, etc. Also shown in (b) is a vertical view into the lower furnace half, with gas preheating coil and insulation in place, but with stainless steel ring and lower heating elements removed for viewing.

Figure 2 is a schematic vertical cross-section view of the assembled furnace. The chamber ID is 10 inches. The lower furnace half rests on the A-frame platform, while the upper furnace half presses against the sheet sample and O-ring, assisted by a load supplied by a jack. Either vacuum or gas can be supplied to both chambers independently, since the sheet sample effectively

seals off one chamber from the other. Normally, there would be a positive gas pressure on the top side of the sheet and a vacuum on the bottom side. The incoming gas goes through a spiral copper tubing for preheating before entry into the chamber.

The entire tool construction is designed of separable parts in order to permit easy access into the lower chamber, as required. Thus, the rectangular die (about 4 by 5 inches) sits inside a circular steel die holder, which in turn sits in the stainless steel ring. The dies are replaceable, so that for each change in the projection geometry (β-angle, height, projected area of projection, etc.), symmetry, and shape, there will be a new die.

Both chambers have lead-ins for thermo-couples, power leads, vacuum pump and gas. The positions of the heating elements may be adjusted so that they are at the optimum distance from the sheet (and die).

A typical die configuration to check the analytical predictions is shown in Figure 3. This particular projection geometry is selected to check a point on one of the curves in Figure 2 of the attached paper entitled "Optimization of a New Lightweight Sandwich Core". Values selected are $\beta = 77^{o}$ and $b/d_1 = 0.5$. Additional constraints are that a = b and t = constant. A' projection height of 0.5 inch and a unit cell area of 3/4 x 3/4 inch is used for convenience. With these dimensions, the core will have an array of 4 x 6 projections, but more or less projections can be had as desired.

Future Work:

The analysis in the paper referred to above assumes a constant sheet thickness, t. From an experimental point of view, constant thickness has received more attention than methods for varying sheet thickness. It appears that with a die of the type shown in Figure 3, constant thickness will not be

difficult to achieve. However, more specialized techniques may be required for controlled thinning experiments.

Another experimental area that requires attention is better adhesives and bonding techniques for facing sheets and loading plates. The present assistant has a chemistry background and will be able to look into this problem in greater detail.

Future die designs will proceed to other geometries in addition to the current square symmetries and four-sided truncated pyramidal projections. Hexagonal symmetry, initially with truncated conical projections, is the logical next step. Since die design is still largely an art, it is planned to employ gridded sheets to determine the location, amount and extent of local strains. Better control of projection shape and wall thickness distribution should result from such experiments.

RESEARCH ACCOMPLISHMENTS

The most significant result from our analytical work is the methodology established in the analysis of the initial core configurations, which permits the extension of procedures from simple to more complex cores. These methods have been written up in two papers for presentation at important meetings and for inclusion in the proceedings.

The invitation to present a paper in Russia, at the International Conference on Lightweight Shell and Spatial Structures for Normal and Seismic Zones in September 1977, is considered to be very important from a personal standpoint, as well as for the interchange with Russian counterparts that this opportunity provides.

The initial results and our future research plans have drawn considerable

attention from aerospace and materials corporation representatives. They are especially interested in the flexibility afforded by these core designs and the potential applications, which may make a significant impact in the industry.

The most significant experimental development is the new superplastic metal-forming furnace. The increased range of temperatures, pressures, vacuums and selection of atmospheres permit a variety of superplastic materials to be handled therein. Moreover, the flexibility of the die insert arrangement makes possible the quick and efficient testing of a large number of core configurations.

A paper was prepared and presented at the Fourth Inter-American Conference in Materials Technology, in Caracas, Venezuela, entitled "Design and Fabrication of New Core Configurations for Sandwich Panels" (1975) p. 531 (abstract only). Authors were E. E. Underwood, A. Gomez and C. E. S. Ueng. The technological impact of this type of structure, and the relative ease of forming without large and heavy metal-forming equipment, should be particularly significant for underdeveloped countries of the world.

PERSONNEL

The persons involved in carrying out the analytical portion of the program, and their time charged to the project, are:

Dr. C. E. S. Ueng, Co-Principal Investigator. Approximately 1/3-time has been charged during the three academic quarters and 2 full months during the summer quarter. The portion over the 1/4-time allocation was paid from other funds.

Mr. T. L. Liu, Graduate Research Assistant and Ph.D. candidate in the

School of Engineering Science and Mechanics. He will continue to work on this project and part of the research results will be used in his thesis. So far, his salary (1/3-time) has been paid from other sources.

The experimental work has been performed by:

Dr. E. E. Underwood, Co-Principal Investigator. The equivalent of 1/3-time has been charged during the three academic quarters and 2 full months during the summer quarter.

Time charged to the project by Student Assistants has been at the rate of $300 per month. Currently, Mr. Roy E. Crooks, candidate for an M.S. in Metallurgy, is working on the experimental phase and will continue to do so during the next 12-month period.

ATTACHMENTS

(1) "Least Weight Design of Superplastically Formed Sandwich Cores" by C. E. S. Ueng and T. L. Liu.

(2) "Optimization of a New Lightweight Sandwich Core", by C. E. S. Ueng and T. L. Liu.

(3) "Design and Fabrication of New Core Configurations for Sandwich Panels", by E. E. Underwood, A. Gomez, and C. E. S. Ueng. (Abstract only published).

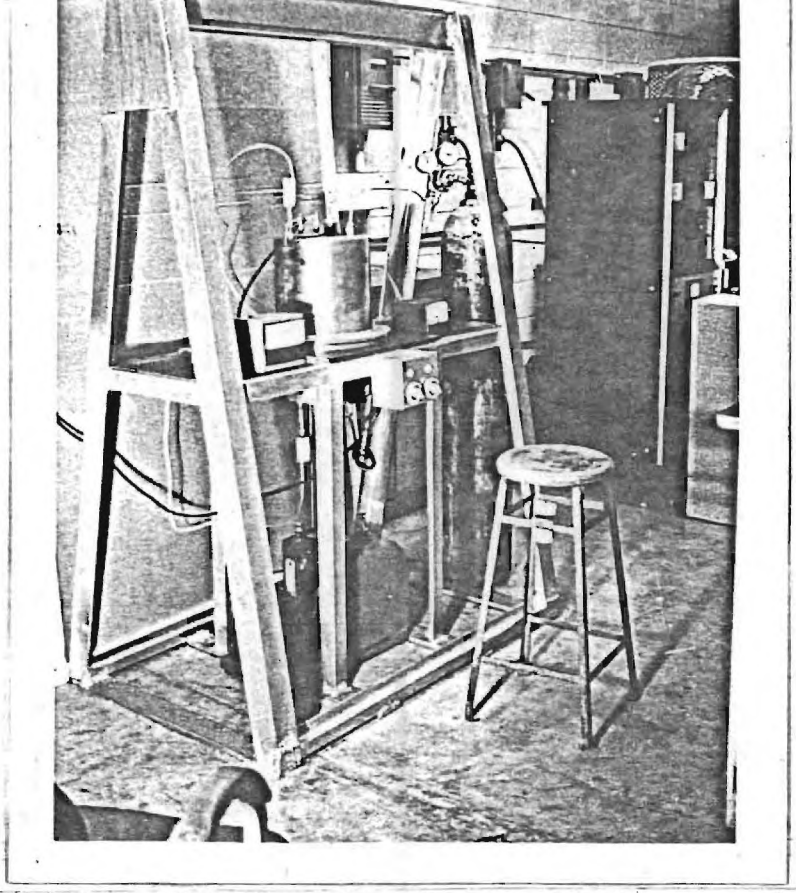

(a) Over View of Vacuum-Pressure Forming Furnace

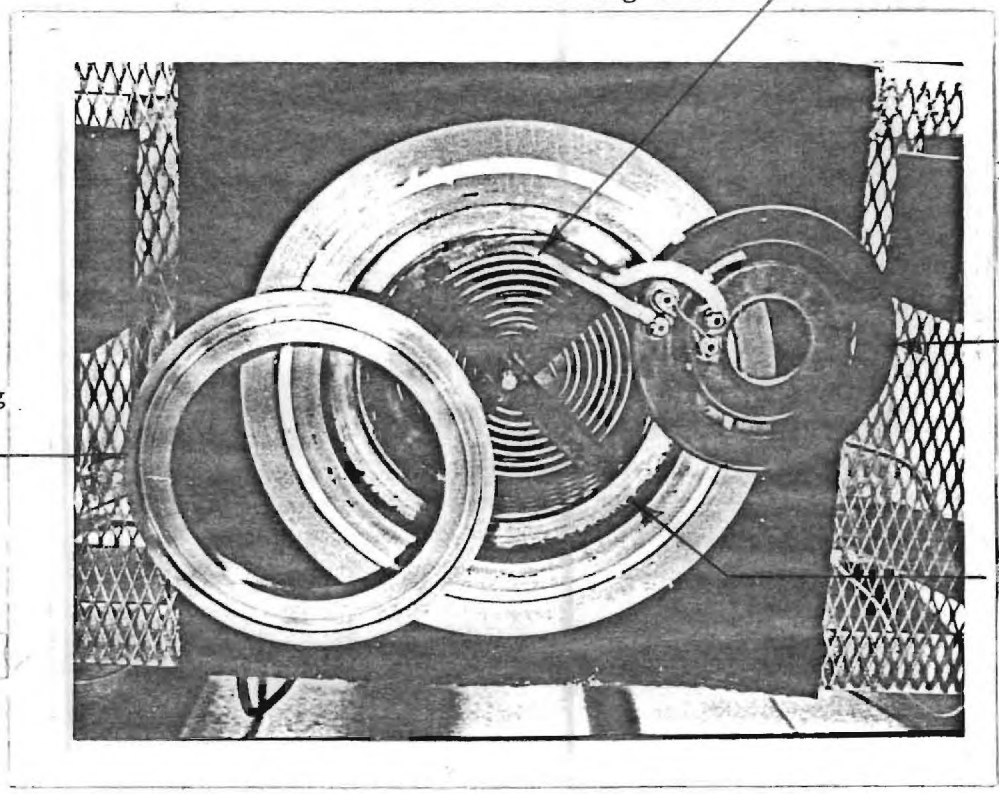

(b) Inside View of Lower Furnace and Accessories

Figure 1. New Furnace for Forming Superplastic Sheet Material

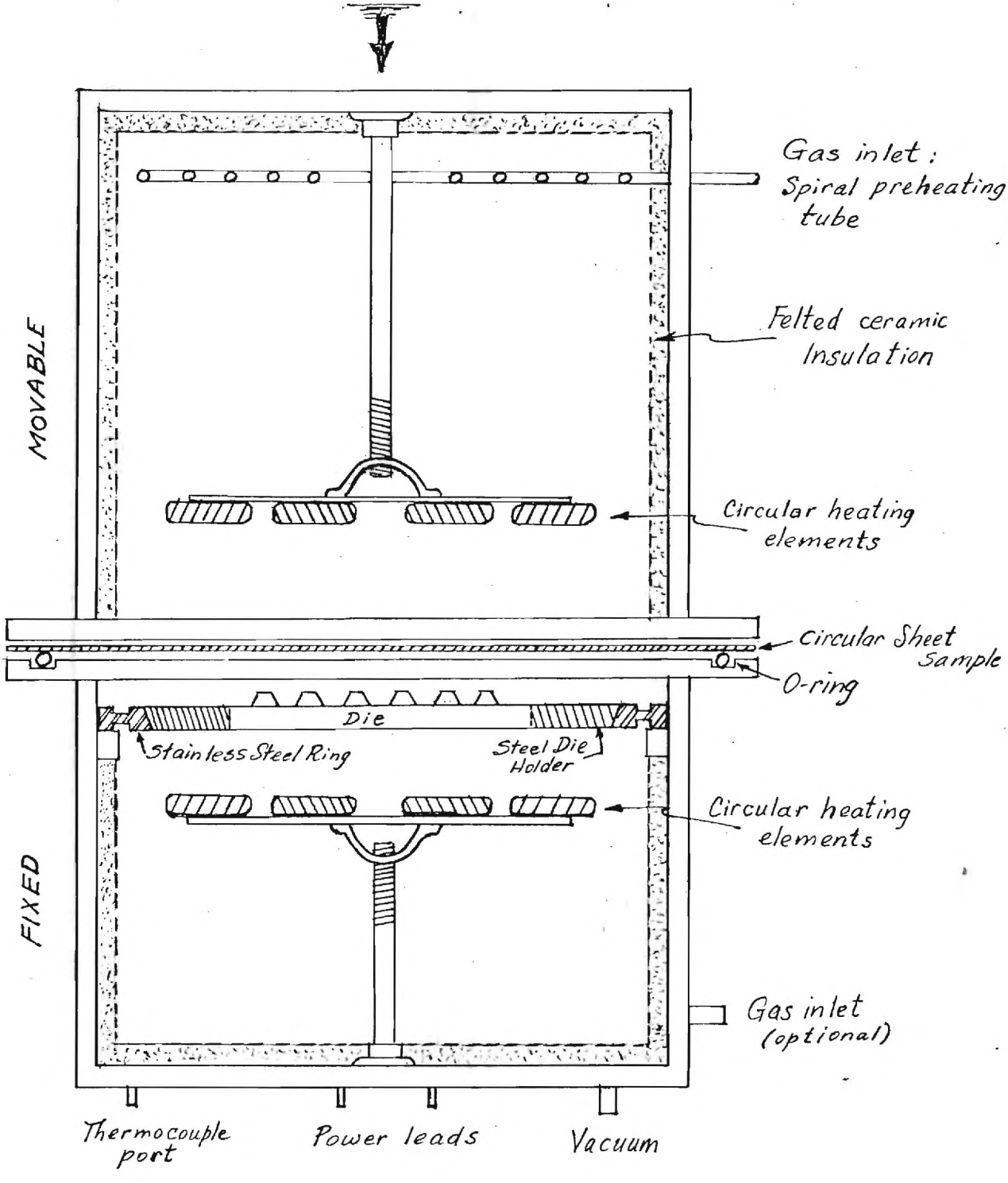

Figure 2. Schematic Drawing of Superplastic Sheet Forming Furnace

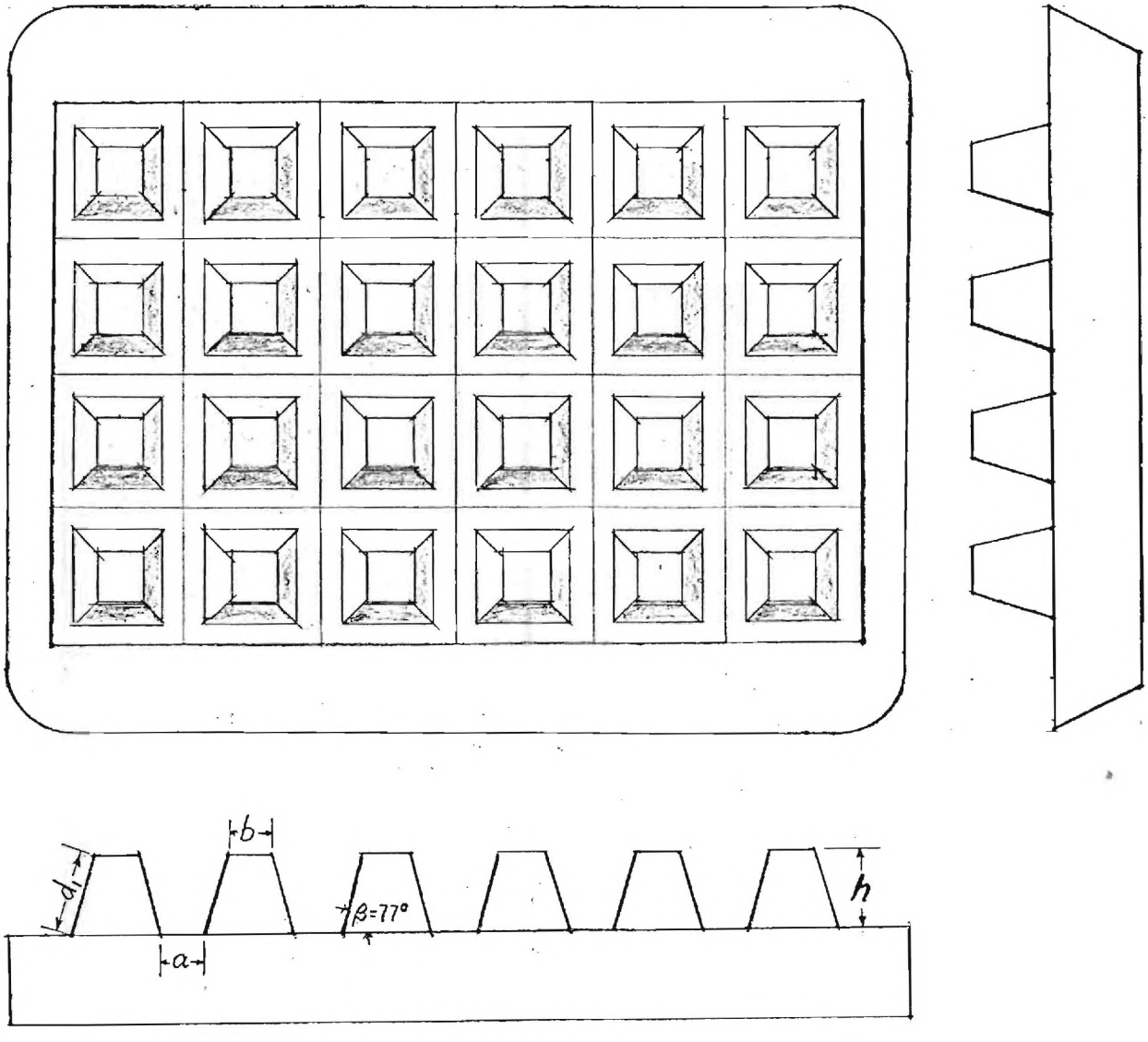

Figure 3. Typical Die Configuration

LEAST WEIGHT DESIGN OF SUPERPLASTICALLY FORMED SANDWICH CORES*

by

Charles E. S. Ueng
Associate Professor

and

T. L. Liu
Graduate Student
School of Engineering Science and Mechanics
Georgia Institute of Technology
Atlanta, Georgia 30332

Sandwich structure has become a well accepted structural form during recent years. It is not only used for the sophisticated aerospace designs, but also in housing construction, transportation, packaging and numerous other applications.

One of the many advantages of a sandwich structure is that it can provide a very high stiffness-weight ratio due to the low density core which is joined together with the upper and lower thin facing sheets. This special feature can play a very important role in the design of lightweight spatial structures. For structures located in an active seismic zone, it is always desirable to have a lightweight design in order to reduce the associated seismic forces which are generally proportional to the mass or the weight of the structure. Another important feature is that a lightweight design may also increase the natural frequencies of vibration. In using the spectrum curves for seismic integrity design, a higher fundamental frequency can often pass and avoid the peak acceleration reading, and consequently lower the associated seismic forces.

---

*This research is supported by a National Science Foundation Grant No. ENG75-17968. Accepted by the 2nd Annual ASCE Engineering Mechanics Specialty Conference, N.C. State Univ., May 23-25, 1977.

In order to cut down the manufacturing cost of the commonly used aluminum hexagonal sandwich core, and increase the bonding effectiveness, a new method using superplastic material and vacuum forming technique is being developed at Georgia Institute of Technology. In this new process, different core configurations are obtained by heating up the superplastic sheet and then allowing it to collapse gently onto a die having the desired geometry. Reinforcements such as KAVLAR 49 yarn by Du Pont may be pre-placed on the die in order to increase the strength. None of these advantages is obtainable in the conventional honeycomb core construction.

There are several interesting problems related to the application of and the advances in engineering mechanics in this investigation. They are: (1) Least weight of core structure, (2) Determination of shear modulus of the core, (3) Optimization of the core configuration such as to maximize the shear modulus, (4) Stress analysis at critical points in the core and the assembled panel, and (5) Geometrical optimization of assembled sandwich panel. Among the problems just cited here, some of them involve a phase of optimization where the titled quantity plays a role as an Objective Function. These objective functions are usually subjected to constraint conditions, equality and/or inequality constraints, such as (1) a minimum or maximum thickness of individual parts of the core structure, (2) the range of inclination of the projection wall, (3) the range of volume percentage of reinforcing wires, (4) the maximum stress level, and (5) the range of core depth.

In this paper, a core configuration of truncated hollow pyramid of square top and uniform thickness on four sides is considered (see Fig.1). For a given

ρ, the superplastic material density, t, the thickness, and b/d_1 (see Fig.1), the minimum density of the core with respect to the inclination angle β, is determined. First, the weight of one cell or projection is calculated. Then this weight is set equal to the product of the equivalent core density ρ_c and the assumed volume V to be occupied by each projection. By doing so, then the vanishing of the first derivative leads to a fourth degree polynomial of $\cos\beta$ with coefficients which are functions of b/d_1. Roots of this polynomial are obtained numerically and they are plotted with the least weight in a graph for different values of b/d_1.

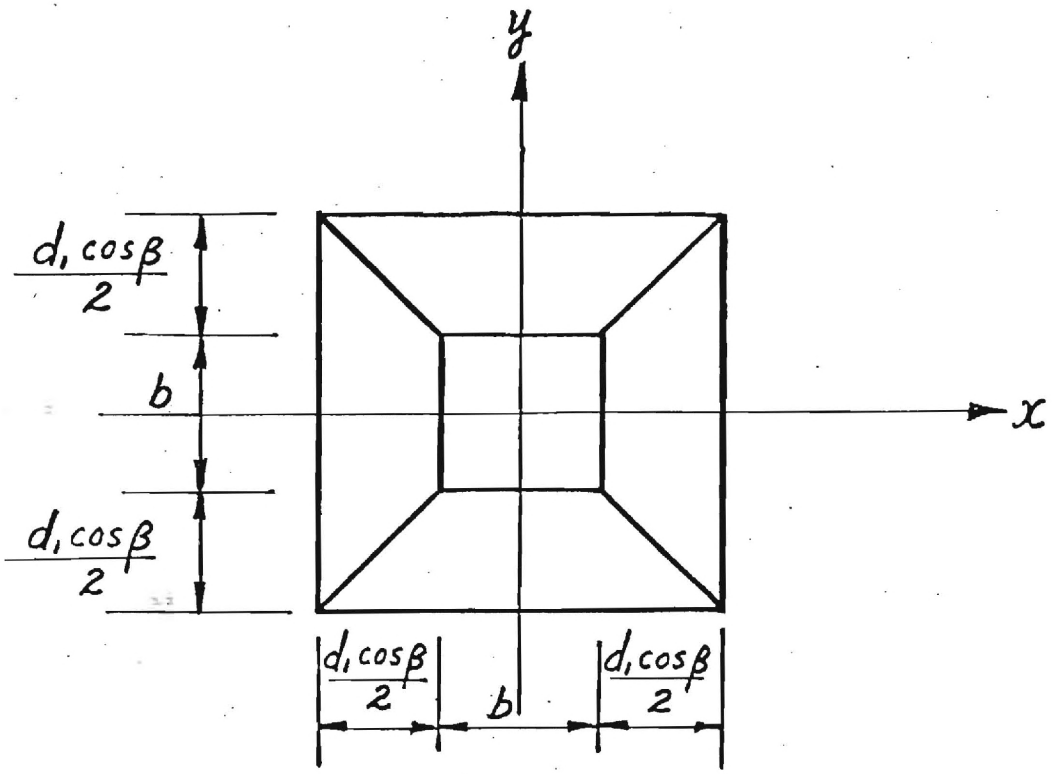
y
x
$\frac{d_1 \cos\beta}{2}$
b
$\frac{d_1 \cos\beta}{2}$
$\frac{d_1 \cos\beta}{2}$
b
$\frac{d_1 \cos\beta}{2}$

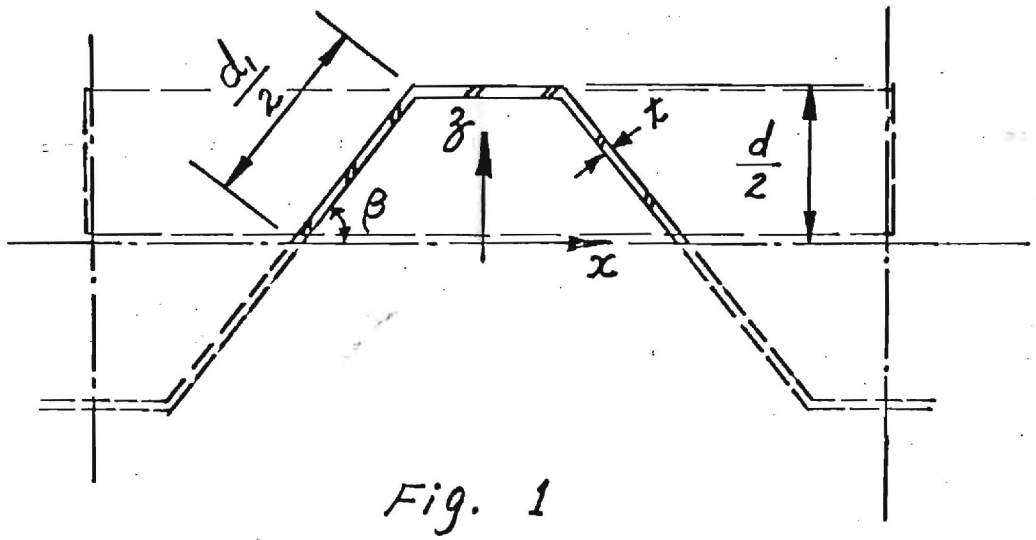
$d_1/2$
z
t
$\frac{d}{2}$
β
x

Fig. 1

C. E. S. Ueng, Ph.D. and T. L. Liu, M.S.
Georgia Institute of Technology, USA

OPTIMIZATION OF A NEW LIGHTWEIGHT SANDWICH CORE*

Annotation

A new lightweight sandwich core is formed at Georgia Institute of Technology by using the superplastic materials and the vacuum-forming technique. The new core can be made in any desirable shape without complicated tooling facilities such as required for the standard honeycomb core structure. In this paper, a four-sided, truncated hollow pyramid with a square top, is investigated. Two problems are studied, namely, seeking of least density core, and the determination and maximization of the shear modulus of the core.

In the least density problem, the weight of a unit projection is first expressed in terms of the dimensional parameters, b, d_1, t and β. Then setting the derivative with respect to β equal to zero, a polynomial of cos β is obtained. Solution of this polynomial offers the best angle β for least core density.

A simple analysis is carried out for the determination of the effective shear modulus of the core. An explicit expression is presented. An effort is made to maximize the shear modulus. For practical reasons, some minimum dimensions are assumed so the optimized configurations will be realizable. This is done by the use of penalty functions in order to transform the optimization problem from a constrained one to an unconstrained one. Finally, Powell's method is used for obtaining the numerical results.

*This paper has been accepted by the International Conference on Lightweight Shell and Spatial Structures for Normal and Seismic Zones, International Association of Shell and Spatial Structures, Sept. 13-16, 1977, Alma-Ata, U.S.S.R.

C. E. S. Ueng, Ph.D. and T. L. Liu, M.S.
Georgia Institute of Technology, USA

OPTIMIZATION OF A NEW LIGHTWEIGHT SANDWICH CORE

Symbols:

A = area of the top

A_i = functions of b/d_1

b = top width

d_1 = length of inclined wall

g_i = inequality constraints

G = bulk shear modulus

$G_{eff.}$ = effective shear modulus of the core

h_i = equality constraints

ℓ = horizontal shear displacement

P_i = horizontal shear resultants

r_k, s_k = penalty function parameters

V = assumed volume for each projection to be responsible

W = weight of one projection

β = inclination angle

γ = overall shear strain of the projection

γ_i = shear strain in the designated wall

ρ = bulk material density

ρ_c = core density

τ_θ = average shear stress

Introduction:

During recent years, sandwich structure has become a well accepted structural form, not only used in the sophisticated aerospace designs, but also in housing construction, transportation, packaging, and numerous other applications.

One of the many advantages of sandwich structure is that it can provide a very high stiffness-weight ratio due to the provision of a low density core. This special feature can play a very important role in the design of lightweight spatial structures. For such a structure located in an active seismic zone, it is always desirable to have a lightweight design in order to reduce the associated seismic forces which are generally proportional to the mass or the weight of the structure. Furthermore, a lightweight design can also increase the natural frequencies of structural vibration. In using spectrum curves for the structural integrity analysis due to earthquake motion, a higher frequency of vibration can often skip or pass the peak acceleration in a given spectrum curve. Consequently, a lower spectrum acceleration is obtained and a lower seismic force results.

Traditionally, sandwich core is made of aluminum, paper, cellular materials in the shape of hexagon and with vertical walls. Among these, the use of aluminum foil almost dominates all the important structural applications of sandwich panels. In the manufacturing process of aluminum core, the tooling facility is usually quite costly. Besides this, only a line contact between the facing sheets and the core is available for bonding purposes. In order to avoid these two drawbacks, a new method using superplastic material and vacuum-forming technique is being developed at Georgia Institute of Technology. In this new process, different core configurations are obtained by heating up the superplastic sheets and then allowing it to collapse gently onto a die having the desired geometry. Reinforcements such as KAVLAR 49 yarn by DuPont may be pre-placed on the top of the die in order to increase the strength.

In this paper, two problems are investigated and reported:

(1) The least density core of a truncated hollow pyramid shape versus the wall inclination is sought; and

(2) For a given constant volume or weight, the shape of the truncated hollow pyramid is optimized in order to obtain the maximum shear modulus of the core structure. The problem is then reduced to a structural optimization problem subjected to equality and inequality constraints. Penalty functions are then used. Finally, Powell's technique is employed for maximizing the equivalent shear modulus of the core.

In the literature, two books [1] and [2] are available on the topic of sandwich construction. Plemtma [1] compiled the derivation of sandwich beams and plates with emphasis on the solutions of boundary value problems. Allen [2] included additional information for practical design problems.

Chang and Ebcioglu [3] presented a simple analytic theory for the effect of cell geometry on both the shear modulus and the density of sandwich core of a standard hexagonal honeycomb shape. Penzien and Didriksson [4] investigated the effective shear modulus of honeycomb core structure, including both analytical and experimental investigations.

The core of a sandwich panel is essentially assumed to resist the transverse shear forces. In fact, almost all the research work done on this subject has been based upon this assumption ([1-2] and the references quoted there). For the purpose of having an efficient design, the core must be lightweight and strong in carrying the loadings, particularly the transverse shear. Because the core has a relatively low shear moduli in comparison with the counterpart of the facing sheets, the sandwich panel will, in general, experience appreciable shear deformations. The amount of shear deformations produced may be important for the design criteria. Therefore, it is essential that design engineers be able to predict these deformations analytically. To make these predictions possible, however, the effective or overall shear modulus of the core structure must be known. The purpose of this paper is an attempt to answer these questions.

Analysis:

1. Minimum Density Core Problem

In this investigation, a truncated hollow pyramid shape as shown in Figure 1 is selected. The problem is to seek the minimum equivalent core density with respect to the inclination angle β for a given ρ, t and the ratio b/d_1. According to Figure 1, the weight of one projection or cell may be written as

$$W = b^2 t\rho + 4\left[\frac{2b + d_1 \cos\beta}{2} \times \frac{d_1}{2} \times t \times \rho\right]$$

or

$$W = \left[b^2 + (2b + d_1 \cos\beta)\, d_1\right] t\rho \tag{1}$$

Introducing the equivalent core density ρ_c, and letting

$$W = \rho_c V \tag{2}$$

where V is the assumed volume for each projection to be responsible in the core structure, i.e.

$$V = 2\, d_1 \sin\beta\, (b + d_1 \cos\beta)^2 \tag{3}$$

Substituting W from eq. (1) and V from eq. (2) into eq. (3), then one has

$$\frac{\rho_c}{t\rho} = \frac{b^2 + (2b + d_1 \cos\beta)\, d_1}{2\, d_1 \sin\beta\, (b + d_1 \cos\beta)^2} \tag{4}$$

Setting the derivative of $\rho_c/t\rho$ with respect to β to be equal to zero, one has after simplification, the following fourth degree algebraic equation

$$\cos^4\beta + A_3 \cos^3\beta + A_2 \cos^2\beta + A_1 \cos\beta + A_o = 0 \tag{5}$$

where

$$A_0 = -\frac{3}{2} r^2 - r^3$$

$$A_1 = -2r - r^2 + r^3 + \frac{1}{2} r^4$$

$$A_2 = -\frac{1}{2} + 4r + 2r^3 \tag{6}$$

$$A_3 = 4r + \frac{3}{2} r^2$$

and

$$r = \frac{b}{d_1}$$

By assuming a range of r, i.e., the ratio of b and d_1, then one can solve the roots of equation (5). This was done by a digital computer. Results are shown in Figures 2 and 3. Note that a check has been carried out to ensure that the second derivative of the same argument with respect to β changes from negative to positive in order to ensure that the extreme value is a minimum.

2. Determination and Maximization of Shear Modulus of the Core

The new core design provides flat surfaces for bonding purposes with the facing sheets rather than just line edges as in the case of honeycomb cells. The shear stiffness in the new core is expected to be higher than the honeycomb core made of the same material. Furthermore, the new core configuration is likely to provide some resistance to the in-plane forces.

For determining the effective shear modulus of the new core, a basic projection as shown in Figure 1 is considered. Extending the method as used in [3] for the case of standard honeycomb core to the new configuration of a truncated hollow pyramid, let the top face of this representative projection be given an arbitrary shear displacement ℓ along θ direction in the horizontal plane. Assuming that the middle xy-plane does not undergo

to have any horizontal shear displacement, then the strains, in the overall sense, can be calculated as follows:

The shear strain γ_1 in the two opposite inclined walls denoted by 1 in Figure 1 are approximately equal and can be shown to be

$$\gamma_1 = \frac{\ell \cos \theta}{d_1/2} = \frac{2\ell \cos \theta \sin \beta}{d} \tag{7}$$

The shear strain γ_2 in the other two opposite inclined walls denoted by 2 in Figure 1 are also about equal, i.e.

$$\gamma_2 = \frac{\ell \sin \theta}{d_1/2} = \frac{2\ell \sin \theta \sin \beta}{d} \tag{8}$$

The corresponding shear stress in area 1 is $G\gamma_1$. Thus the shear force on the cross-section which is perpendicular to the inclined wall, is

$$P_1 = G\gamma_2 bt = \frac{2\ell \cos \theta \sin \beta}{d} Gbt \tag{9}$$

Similarly, one can find the shear force on the cross-section which is normal to the inclined wall in area 2, is

$$P_2 = G\gamma_2 bt = \frac{2\ell \sin \theta \sin \beta}{d} Gbt \tag{10}$$

Thus the shear force resultant is obtained as

$$P = \left[(2P_1)^2 + (2P_2)^2\right]^{1/2} \tag{11}$$

or

$$P = 4 \frac{\ell}{d} Gbt \sin \beta \tag{12}$$

with its direction in θ-direction. The average shear stress in the horizontal plane can now be evaluated from eq. (7). Note that no assumption such as the force direction is the same as that of the displacement has been made here. From eq. (12), the average shear stress is

$$\tau_\theta = \frac{P}{A} = \frac{4\ell Gbt}{Ad} \sin \beta \tag{13}$$

where A is the area of the projection square. Substituting $A = 4(b + d_1 \cos \beta)^2$ into eq. (13) gives

$$\tau_\theta = \frac{\ell G b t}{d(b + d_1 \cos\beta)^2} \sin\beta \tag{14}$$

The overall shear strain γ of the projection itself, can be expressed as

$$\gamma = \frac{\ell}{d/2} \tag{15}$$

Then the effective or equivalent shear modulus of the core structure can be obtained from equations (14) and (15), i.e.,

$$G_{eff.} = \frac{\tau_\theta}{\gamma} = \frac{Gbt}{2(b + d_1 \cos\beta)^2} \sin\beta \tag{16}$$

It is desirable to maximize the effective shear modulus. That is, for a given weight, one seeks the optimum geometry of the truncated pyramid such that the shear modulus is a maximum. In order to ensure that the optimized configurations are practically possible, the parameters such as b, t, β, and d_1, must be within certain feasible ranges. From a mathematical point of view, this structural optimization problem is expressible as a maximization subjected to equality and inequality constraints. By introducing the penalty functions, the constrained maximization problem is transformed to a sequence of unconstrained maximization. This method is often called SUMT, Sequencial Unconstrained Minimization Technique. Detailed explanation of this method is available such as in References [5] and [6].

Taking $G_{eff.}$ given by eq. (16) as the Objective Function, and the accompanying constraints are:

(i) W = weight per projection, is a constant, i.e.,

$$\left[b^2 + (2b + d_1 \cos\beta)\, d_1\right] t\rho = \text{constant} \tag{17}$$

(ii) t must be no less than t_{min}, i.e.,

$$t - t_{min} \geq 0 \tag{18}$$

(iii) d_1 must be no less than $(d_1)_{min}$, i.e.,

$$d_1 - (d_1)_{min} \geq 0 \tag{19}$$

(iv) b must be greater than zero, i.e.,

$$b > 0 \tag{20}$$

(v) For practical purposes, β must be greater than zero and no greater than $\pi/2$, i.e.,

$$0 < \beta \leq \pi/2 \tag{21}$$

The transformed function $\bar{G}$ can now be formulated as

$$\bar{G}(\bar{X}, r_k, s_k) = G(\bar{X}) + r_k \sum_{m=1}^{M} \frac{1}{g_m(\bar{X})} + s_k \sum_{j=1}^{J} \left[h_j(\bar{X}) \right]^2 \tag{22}$$

where

$$\bar{X} = (t, b, d_1, \beta) \tag{23}$$

$$g_1(\bar{X}) = t - t_{min} \geq 0 \tag{24}$$

$$g_2(\bar{X}) = d_1 - (d_1)_{min} \geq 0 \tag{25}$$

$$g_3(\bar{X}) = b > 0 \tag{26}$$

$$g_4(\bar{X}) = \beta > 0 \tag{27}$$

$$g_5(\bar{X}) = \beta - \frac{\pi}{2} \leq 0 \tag{28}$$

and

$$h_1(\bar{X}) = W - \left[b^2 + 2b + d_1 \cos \beta) \, d_1 \right] t\rho = 0 \tag{29}$$

In the numerical computation, first, a set of values for r_k and s_k is assumed. In addition, t_{min} and $(d_1)_{min}$ are also selected from practicality point of view so the optimized dimensions will be physically possible to be formed by superplastic materials. The transformed function is then maximized by the efficient Powell's method [7]. The maximized nondimensionalized shear modulus versus b/d_1 is plotted in Figure 4 for different values of β.

Discussions and Conclusions:

Numerical results as presented in Figures 2 through 4, reveal certain interesting phenomena for the investigation carried out here. Figure 2 provides the relation between the nondimensional core density and β for different values of b/d_1. It is clear that for each of the four curves shown, there is a minimum for the nondimensional core density at a particular value of β. This information should be useful for seeking the configuration of minimum density core. The curve shown in Figure 3 represents the minimum

density curve, i.e., for a given value of b/d_1, one can find the corresponding value of β such that the core density is a minimum.

Finally, Figure 4 provides the relation between the nondimensional shear modulus of the core versus b/d_1 for different values of β. It is noted here that the effective shear modulus increases as b/d_1 increases. Also true is the fact that it gets higher and higher as β approaches to a right angle. Limitations set up on $b/d_1 = 3$ and $\beta = \pi/2$ are due to practical manufacturing reasons.

A truncated hollow pyramid has been selected and investigated here. Other shapes such as a truncated hollow cone and a six-sided truncated hollow pyramid are being studied. Results will be reported at a later time.

References:

[1] F. J. Plantema, Sandwich Construction, John Wiley, 1966.

[2] H. G. Allen, Analysis and Design of Structural Sandwich Panels, Pergamon Press, 1969.

[3] C. C. Chang and I. K. Ebcioglu, "Effect of Cell Geometry on the Shear Modulus and on Density of Sandwich Panel Cores," Journal of Basic Engineering, American Society of Mechanical Engineers, December 1961, pp. 513-518.

[4] J. Penzien and T. Didriksson, "Effective Shear Modulus of Honeycomb Cellular Structure," AIAA Journal, March 1964, pp. 531-535.

[5] R. Fletcher, "Mathematical-programming Methods - A Critical Review," Chapter 5, Optimum Structural Design, edited by R. H. Gallagher and O. C. Zienkiewicz, John Wiley, 1973.

[6] J. More, "Penalty-function Methods," Chapter 9, Optimum Structural Design, edited by R. H. Gallagher and O. C. Zienkiewicz, John Wiley, 1973.

[7] M. J. D. Powell, "An Efficient Method for Finding the Minimum of a Function of Several Variables Without Calculating Derivatives," The Computer Journal, Vol. 7, No. 2, July 1964, pp. 155-162.

Acknowledgement: This research is supported by a National Science Foundation Grant No. ENG 75-17968.

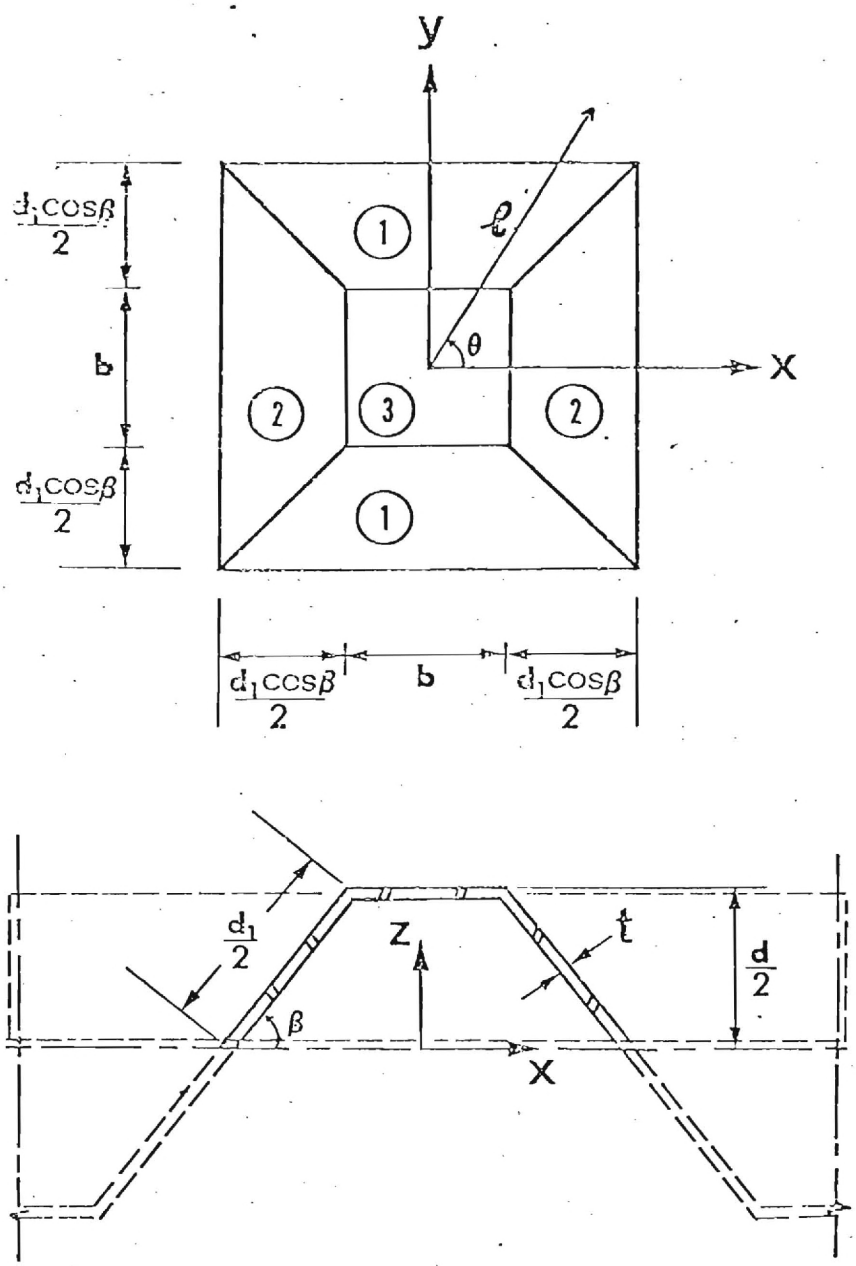

Fig.1 A Unit Projection of the Core

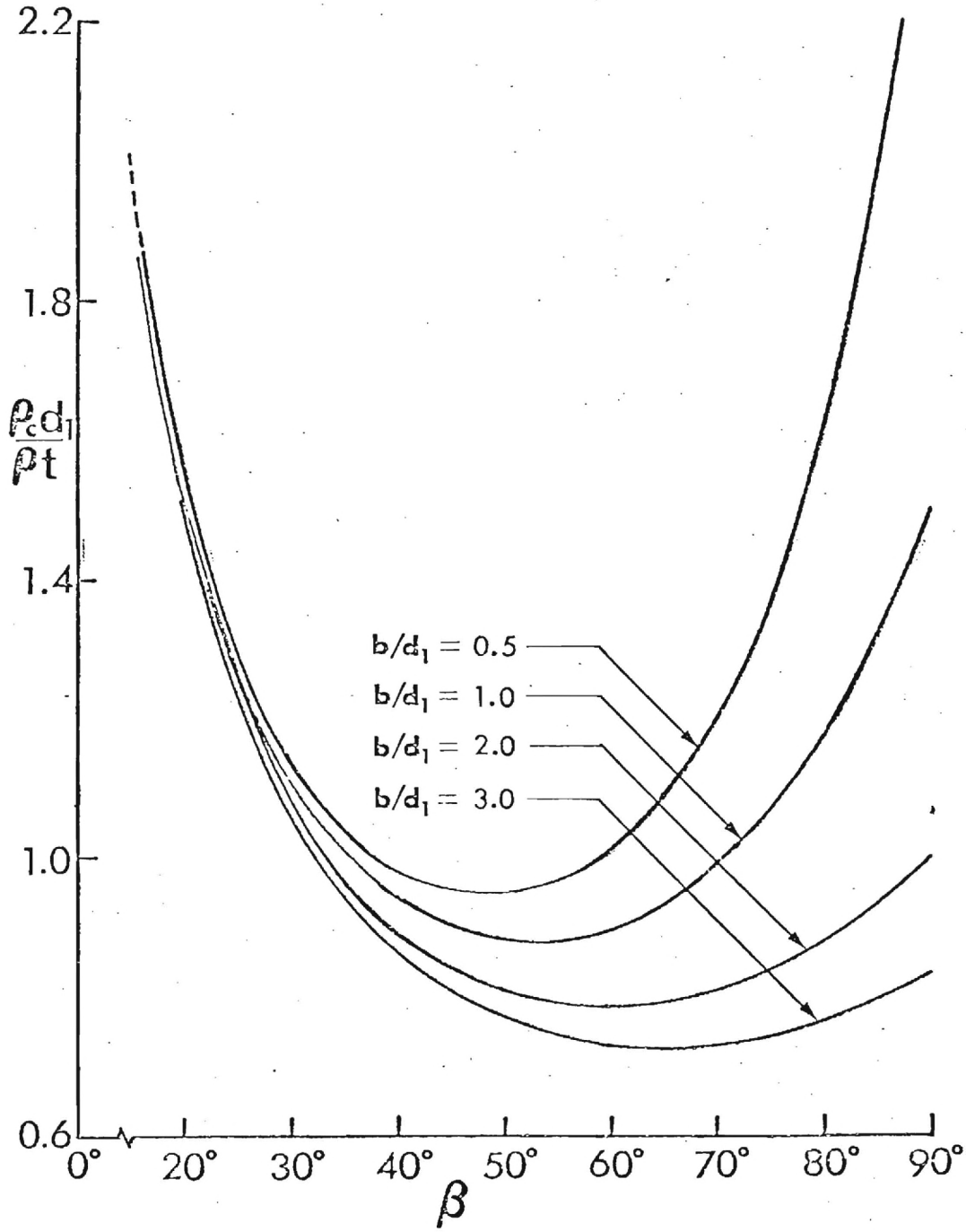

Fig. 2 Equivalent Core Density versus β-angle

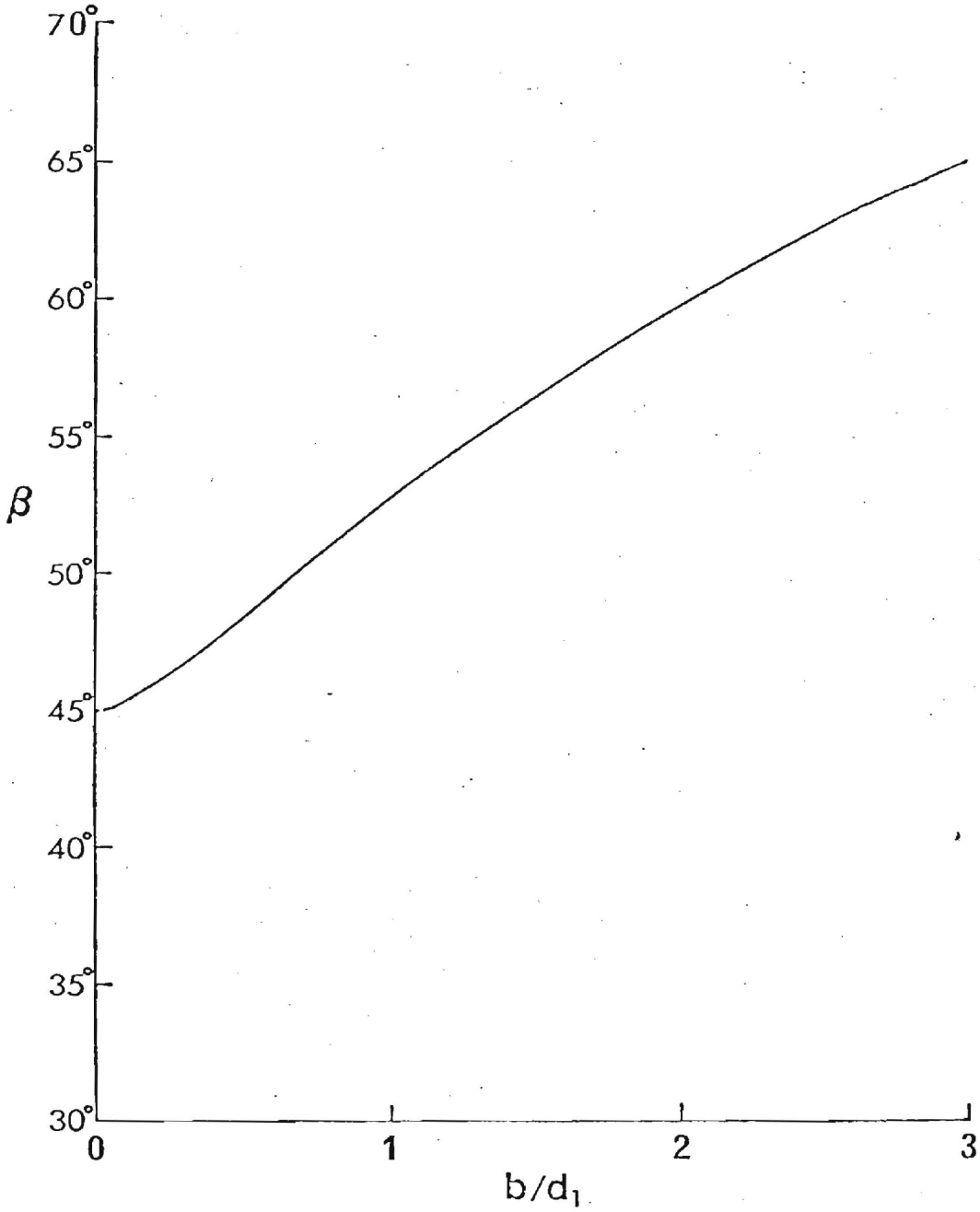

Fig. 3 Minimum Density Curve: β versus b/d_1

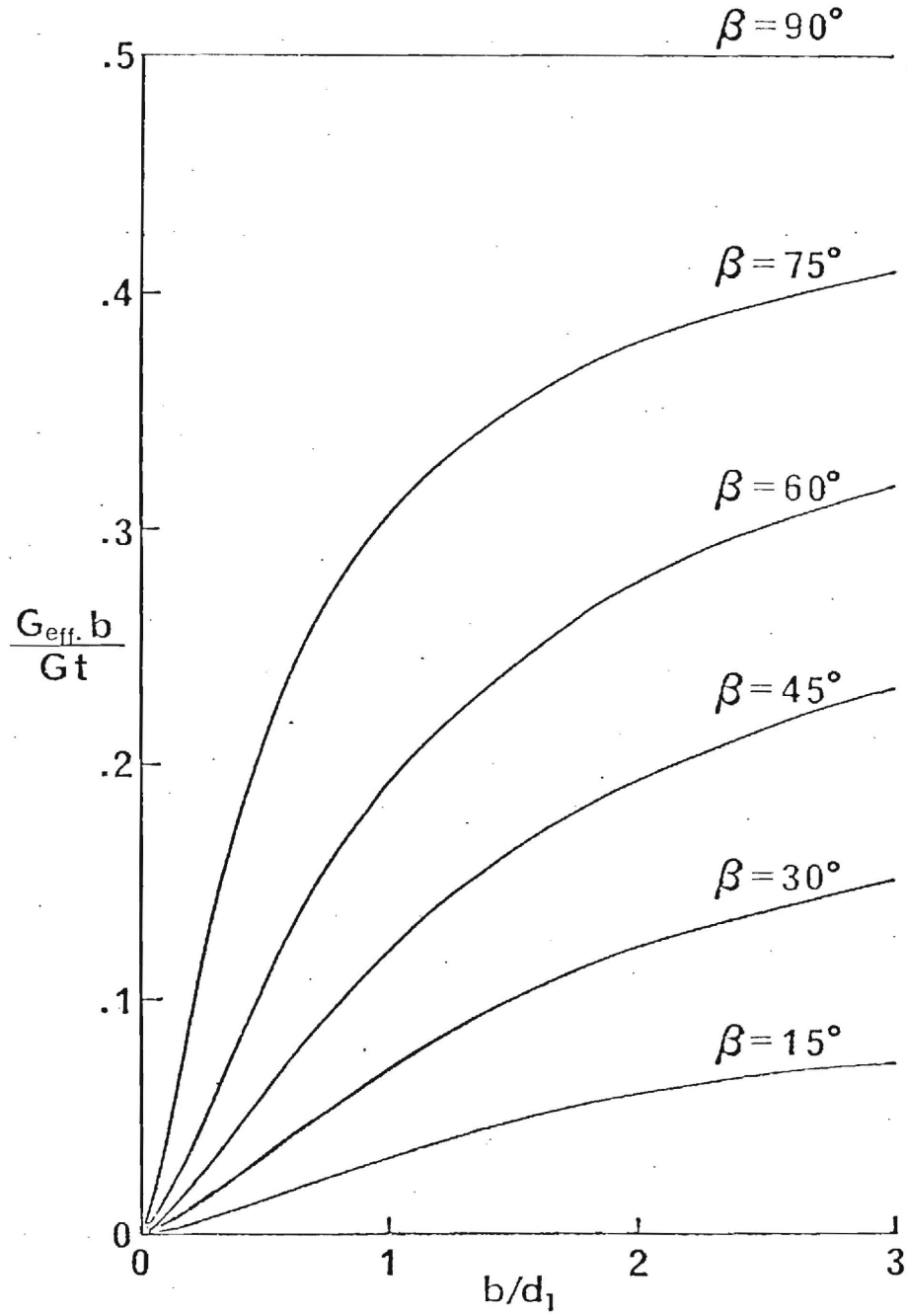

Fig. 4 Nondimensional Effective Shear Modulus versus b/d_1

DESIGN AND FABRICATION OF NEW CORE CONFIGURATIONS FOR SANDWICH PANELS*
FOR
IV CONFERENCE IN MATERIALS TECHNOLOGY

by

E. E. Underwood[1], Amilcar Gomez[2], and C. E. S. Ueng[3]
Georgia Institute of Technology

ABSTRACT

New design and fabrication methods for sandwich core configurations are presented in this paper. Materials such as paper pulp, polymers, and superplastic metals are considered. Some experimental studies on fabrication of new cores based upon these materials have been successfully carried out in the laboratory at Georgia Tech.

The new designs provided numerous advantages over the conventional honeycomb pattern. The bonding effectiveness between the core and facing plates is greatly increased due to the provision of the top flat areas in the core structure. The new geometry also makes it possible to use different kinds of materials or different combination of materials in order to achieve maximum rigidity, maximum compression strength, minimum weight or other particular requirements. By adding reinforcements such as fine wires into the core, it is also possible, to develop and achieve the multi-directional strength. The geometry of the new core is not limited to the conventional hexagonal honeycomb shape. It is a rather convenient task to have other configurations such as square, octagional, different types of surface of revolution, or any other pattern which is best suitable for a particular application.

Vacuum forming methods are applicable to both polymer and metal materials. When in the superplastic condition, metal sheets can be deformed readily by ordinary plastic sheet vacuum forming methods using only atmosphere pressure to force the heated metal sheet into an evacuated chamber containing a female die. The metal assumes the shape of the die with great fidelity when deformed under the correct experimental conditions. The thickness of the projection walls and top can be varied independently by appropriate modifications of the direct forming technique.

---

*Patents are pending for the design and fabrication methods reported in this paper.

[1]Professor of Metallurgy (on leave). Currently, Visiting Scientist, Max Planck Institut für Metallforschung, Stuttgart, West Germany.
[2]Graduate Student. Faculty member of Mechanical Engineering (on leave), Universidad de Oriente, Puertu Lacruz, Venezuela.
[3]Associate Professor, Engineering Science and Mechanics.

The equipment required for producing the cores from plastics or superplastic sheet is relatively inexpensive, especially when compared to the heavy industrial equipment used for conventional stamping and pressing. Production on a large scale can be done either by a batch process (individual panels having the desired dimensions and configurations) or by a continuous process (with core materials formed by rolling in continuous lengths, then cut to the desired panel dimensions later). The production cost is expected to be considerably less than the conventional honeycomb design.

Potential applications of this new core design are numerous: for example, low cost housing, mass transportation and related structures.

Ro/